CUI INC
a bel group

SERIES: VX78-500-W | **DESCRIPTION:** NON-ISOLATED DC SWITCHING REGULATOR

FEATURES

- low Profile
- pin-out compatible with linear regulators
- high efficiency up to 95%
- no-load input current as low as 0.2 mA
- wide temperature range: -40°C ~ +85°C
- support negative output
- output short circuit protection

RoHS

MODEL

MODEL	input voltage[1] typ (Vdc)	input voltage[1] range (Vdc)	output voltage (Vdc)	output current max (mA)	output power max (W)	ripple & noise[2] max (mVp-p)	efficiency[3] typ (%)
VX7803-500-W	24	4.75~36	3.3	500	1.65	75	86
VX7805-500-W	24	6.5~36	5	500	2.5	75	90
	12	7~31	-5	-300	1.5	75	80
VX7809-500-W	24	12~36	9	500	4.5	75	93
VX7812-500-W	24	15~36	12	500	6	75	94
	12	8~24	-12	-150	1.8	75	84
VX7815-500-W	24	19~36	15	500	7.5	75	95
	12	8~21	-15	-150	2.25	75	85

Notes:
1. For input voltages higher than 30 Vdc, a 22 µF / 50 V input capacitor is required.
2. Tested at nominal input, 10~100% load, 20 MHz bandwidth, with 10 µF electrolytic and 1 µF ceramic capacitor on the output. At loads below 10%, the max ripple and noise of the 3.3 & 5 Vdc outputs will be 150 mVp-p, and the other outputs will be 2% Vo.
3. Measured at min Vin, full load.
4. All specifications are measured at Ta=25°C, humidity < 75%, nominal input voltage, and rated output load unless otherwise specified.

PART NUMBER KEY

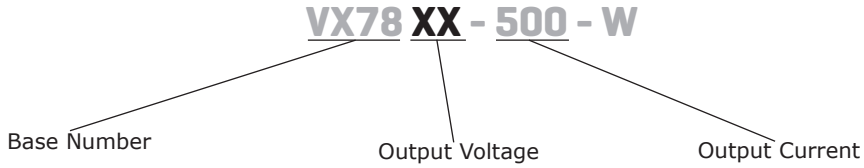

INPUT

parameter	conditions/description	min	typ	max	units
operating input voltage	see Model section on page 1 for specific input voltage ranges				
filter	capacitor filter				
input reverse polartiy protection	no				
no-load input current	positive outputs		0.2	1.5	mA

OUTPUT

parameter	conditions/description	min	typ	max	units
maximum capacitive load[2]	for positive output applications for negative output applications			680 330	µF µF
voltage accuracy	at full load, input voltage range 3.3 Vdc output model all other models		 ±2 ±2	 ±4 ±3	 % %
line regulation	at full load, input voltage range		±0.2	±0.4	%
load regulation	at nominal input, 10~100% load		±0.4	±1.5	%
switching frequency	at nominal input voltage, full load	550		850	kHz
transient recovery time	at nominal input voltage, 25% load step change		0.2	1	ms
transient response deviation	at nominal input voltage, 25% load step change		50	250	mV
temperature coefficient	at full load			±0.03	%/°C

Note: 2. The maximum capacitive load was tested at nominal input voltage, full load.

PROTECTIONS

parameter	conditions/description	min	typ	max	units
short circuit protection	continuous, auto recovery				

SAFETY AND COMPLIANCE

parameter	conditions/description	min	typ	max	units
safety approvals	designed to meet 62368-1: EN, BS EN				
conducted emissions	CISPR32/EN55032, class B (see Figure 5-② for recommended circuit)				
radiated emissions	CISPR32/EN55032, class B (see Figure 5-② for recommended circuit)				
ESD	IEC/EN61000-4-2, contact ± 4kV, perf. Criteria B				
radiated immunity	IEC/EN61000-4-3, 10V/m, perf. Criteria A				
EFT/burst	IEC/EN61000-4-4, ± 1kV, perf. Criteria B (see Figure 5-① for recommended circuit)				
surge	IEC/EN61000-4-5, line-line ± 1kV, perf. Criteria B (see Figure 5-① for recommended circuit)				
conducted immunity	IEC/EN61000-4-6, 3 Vr.m.s, perf. Criteria A				
MTBF	as per MIL-HDBK-217F, 25°C	2,000,000			hours
RoHS	2011/65/EU				

ENVIRONMENTAL

parameter	conditions/description	min	typ	max	units
operating temperature		-40		85	°C
storage temperature		-55		125	°C
storage humidity	non-condensing	5		95	%

SOLDERABILITY

parameter	conditions/description	min	typ	max	units
hand soldering	welding time: 10s (Max.)			260	°C

MECHANICAL

parameter	conditions/description	min	typ	max	units
dimensions	11.50 x 9.00 x 17.50 [0.453 x 0.354 x 0.689 inch]				mm
case material	black flame-retardant heat-proof plastic (UL94V-0)				
weight			5		g

MECHANICAL DRAWING

units: mm [inch]
tolerance: ±0.50[±0.020]
wire type: UL1569 AWG22 (300V 105°C)

PIN CONNECTIONS		
PIN	+OUTPUT	-OUTPUT
1 (red)	Vin	Vin
2 (black)	GND	-Vo
3 (yellow)	+Vo	GND

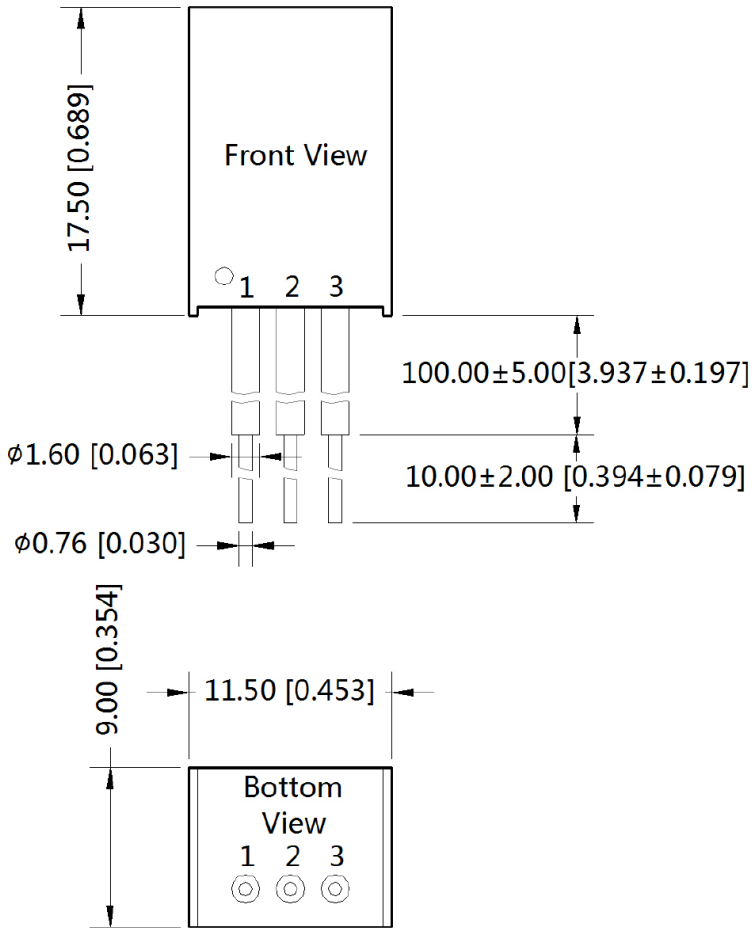

DERATING CURVE

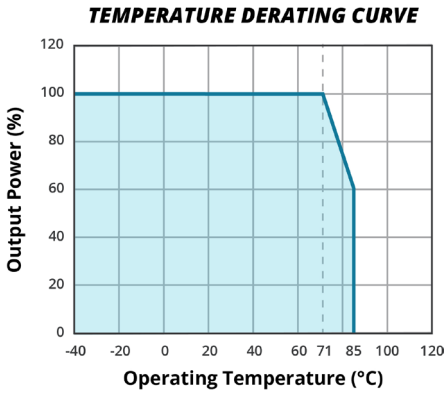

Figure 1

EFFICIENCY CURVES

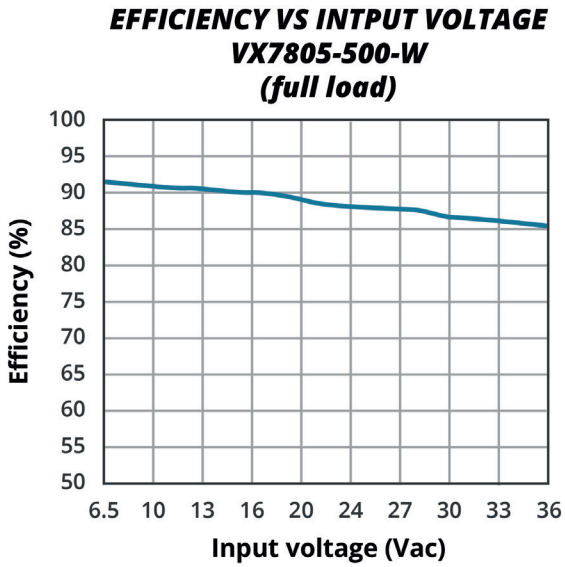

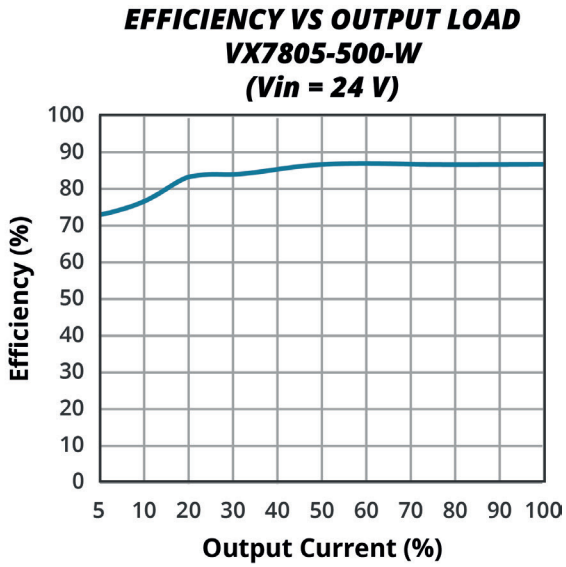

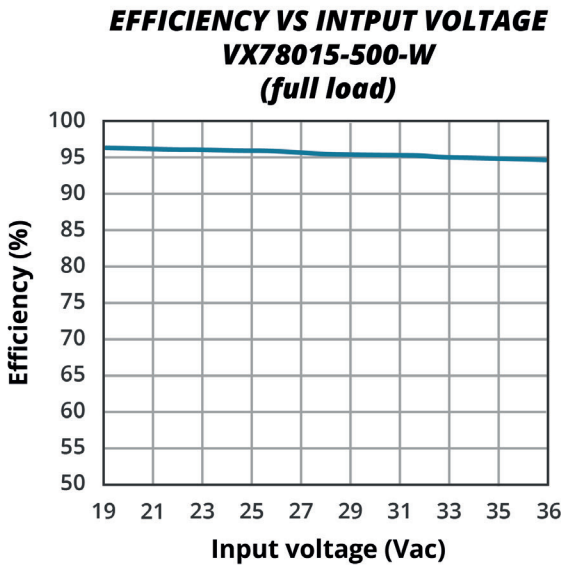

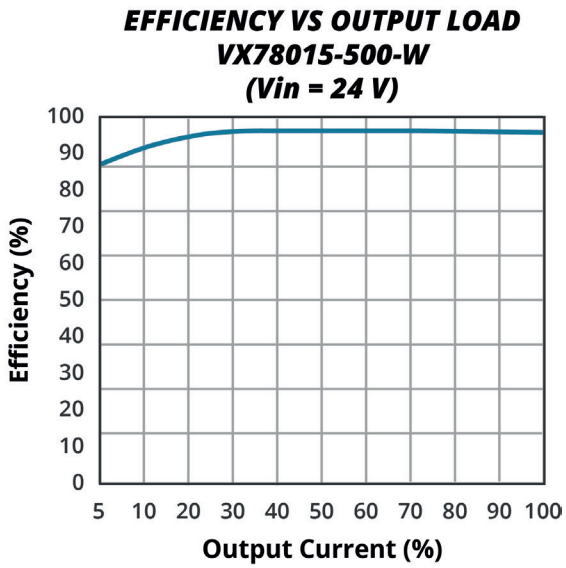

TYPICAL APPLICATION CIRCUIT

Figure 2

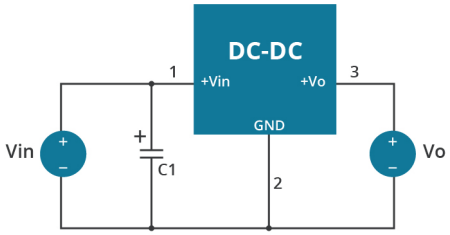

Positive Output Application Circuit

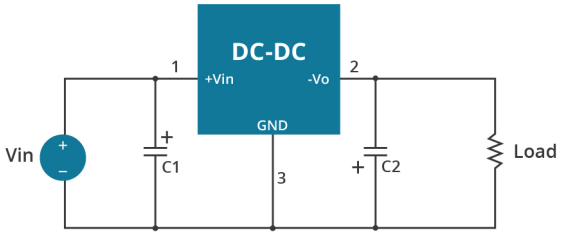

Negative Output Application Circuit

Figure 3

Positive and Negative Output Paralleling Application Circuit

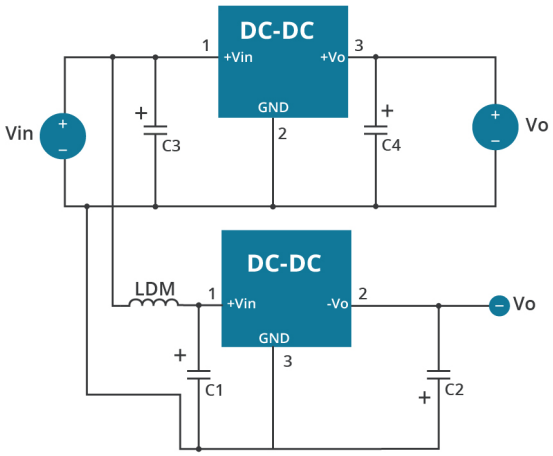

Table 1

External Capacitor Table		
Model Number	C1, C3 (ceramic capacitor)	C2, C4 (ceramic capacitor)
VX7803-500-W	10 µF/50 V	22 µF/10 V
VX7805-500-W	10 µF/50 V	22 µF/10 V
VX7809-500-W	10 µF/50 V	22 µF/16 V
VX7812-500-W	10 µF/50 V	22 µF/25 V
VX7815-500-W	10 µF/50 V	22 µF/25 V

Note: 1.C1 and C2 (C3 and C4) are required and should be connected close to the pin terminal of the module.
2.The capacitance of C1 and C2 (C3 and C4) refer to Sheet 1, it can be increased properly if required, and tantalum or low ESR electrolytic capacitors may also suffice.
3.When the products used as the circuit like figure 3, an inductor named as LDM up to 10µH is recommended in the circuit to reduce the mutual interference.
4.Cannot be used in parallel for output and hot swap.

To reduce the output ripple furtherly, it is suggested to connect a "LC" filter at the output terminal, and recommended value of L is 10µH-47µH.

Figure 4

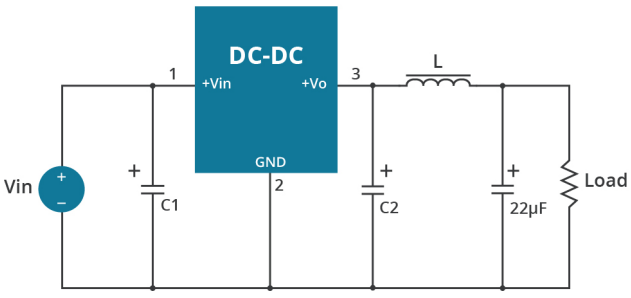

Positive Output Ripple Reduction Circuit

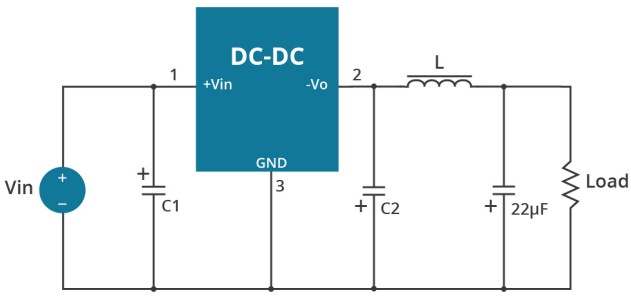

Negative Output Ripple Reduction Circuit

EMC RECOMMENDED CIRCUIT

Figure 5

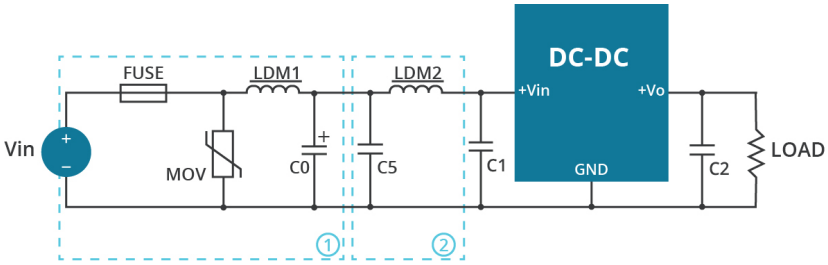

Table 2

Recommended external circuit components	
FUSE	choose according to actual input current
MOV	S20K30
LDM1	82 µH
C0	680 µF/50 V
C1, C2	see Table 1
C5	4.7 µF/50 V
LDM2	12 µH

Note: 1. Part ① in Fig. 5 is for EMS test, part ② is for EMI filtering; parts ① and ② can be added based on actual requirement.

REVISION HISTORY

rev.	description	date
1.0	initial release	01/22/2020
1.01	company logo updated	04/14/2021
1.02	derating curve, efficiency curves and circuit figures updated	09/17/2021
1.03	safeties updated	12/20/2022
1.04	application circuits updated	04/04/2023

The revision history provided is for informational purposes only and is believed to be accurate.

CUI INC
a bel group

Headquarters
20050 SW 112th Ave.
Tualatin, OR 97062
800.275.4899

Fax 503.612.2383
cui.com
techsupport@cui.com

CUI offers a two (2) year limited warranty. Complete warranty information is listed on our website.

CUI reserves the right to make changes to the product at any time without notice. Information provided by CUI is believed to be accurate and reliable. However, no responsibility is assumed by CUI for its use, nor for any infringements of patents or other rights of third parties which may result from its use.

CUI products are not authorized or warranted for use as critical components in equipment that requires an extremely high level of reliability. A critical component is any component of a life support device or system whose failure to perform can be reasonably expected to cause the failure of the life support device or system, or to affect its safety or effectiveness.