CUI INC®

SERIES: VSUP-1K5 | **DESCRIPTION:** AC-DC POWER SUPPLY

DISCONTINUED

FEATURES

- up to 1,500 W continuous power
- universal input (90~264 Vac)
- single output from 12~60 V
- programmable output voltage
- active power correction (98%)
- current sharing capable
- power good, remote sense, remote on/off control
- built-in DC fan
- over load, over voltage, over temperature, and short circuit protections
- UL and TUV safety approvals
- efficiency up to 90%

MODEL

MODEL	output voltage[1] (Vdc)	output current max (A)	output power max (W)	ripple and noise[2] max (mVp-p)	efficiency typ (%)
VSUP-1K5-12	12	125	1,500	120	84
VSUP-1K5-15	15	100	1,500	150	85
VSUP-1K5-18	18	83.3	1,500	150	85
VSUP-1K5-24	24	62.5	1,500	150	88
VSUP-1K5-30	30	50	1,500	150	88
VSUP-1K5-36	36	41.6	1,500	150	88
VSUP-1K5-48	48	31.2	1,500	150	89
VSUP-1K5-60	60	25	1,500	150	90

Notes: 1. output voltage is measured at output power connector
2. ripple and noise is measured from 10 KHz to 20 MHz at output terminals with 0.1 μF ceramic capacitor and a 22 μF electrolytic capacitor in parallel

PART NUMBER KEY

VSUP-1K5 - XX

Base Number — Output Voltage

DISCONTINUED

INPUT

parameter	conditions/description	min	typ	max	units
voltage		90		264	Vac
frequency		47		63	Hz
current	at 230 Vac		9		A
inrush current	peak measured at 230 Vac, cold start		120		A
power factor correction	at 230 Vac, full load		0.98		

OUTPUT

parameter	conditions/description	min	typ	max	units
temperature coefficient	0 ~ 50°C		±0.04		%/°C
hold-up time	230 Vac at full load			12	ms
adjustability	adjustable with built-in trim pot		±1.5		%
programming	output voltage programmable through external 1 ~ 5 V control voltage on VCI.	20		100	%
remote sense	Designated as (VS+) and (VS-). Total voltage compensation from cable losses with respect to the main output.				
remote inhibit	Designated as (INH), requires a low signal to inhibit the output.				
current sharing	Designated as (PAR), use in parallel for forced current sharing function.				

PROTECTION

parameter	conditions/description	min	typ	max	units
over voltage protection		110		135	%
over current protection	shutdown				

SAFETY & COMPLIANCE

parameter	conditions/description	min	typ	max	units
safety approvals	UL/cUL 1950, TUV EN60950				
EMI/EMC	EN 55022, EN 61000-4-(2,3,4,5,6,8,11), EN 61000-3-(2,3), ENV50204				
leakage current	at 240 Vac			7.0	mA
RoHS compliant	yes				

ENVIRONMENTAL

parameter	conditions/description	min	typ	max	units
operating temperature		0		50	°C
storage temperature		-20		85	°C
operating humidity		20		90	%
storage humidity		10		95	%
vibration	for 60 minutes, each axis	10		200	Hz

DERATING CURVES

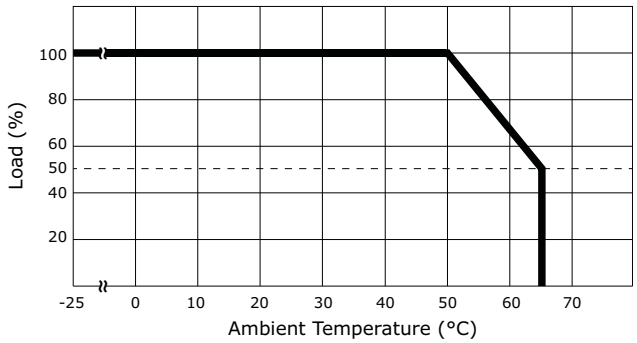

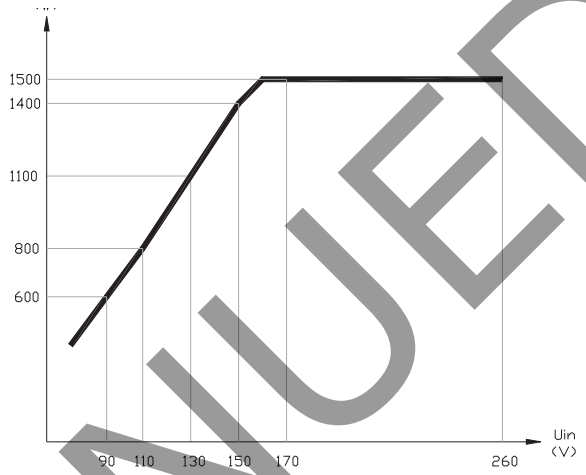

Output power vs Input voltage derating curve

DISCONTINUED

MECHANICAL

parameter	conditions/description	min	typ	max	units
weight			3.8		Kg
dimensions	10.98 x 7.99 x 2.5 (279 x 203 x 63.5 mm)				inch

MECHANICAL DRAWING

units: mm[inch]
tolerance: ±1.0mm unless otherwise specified

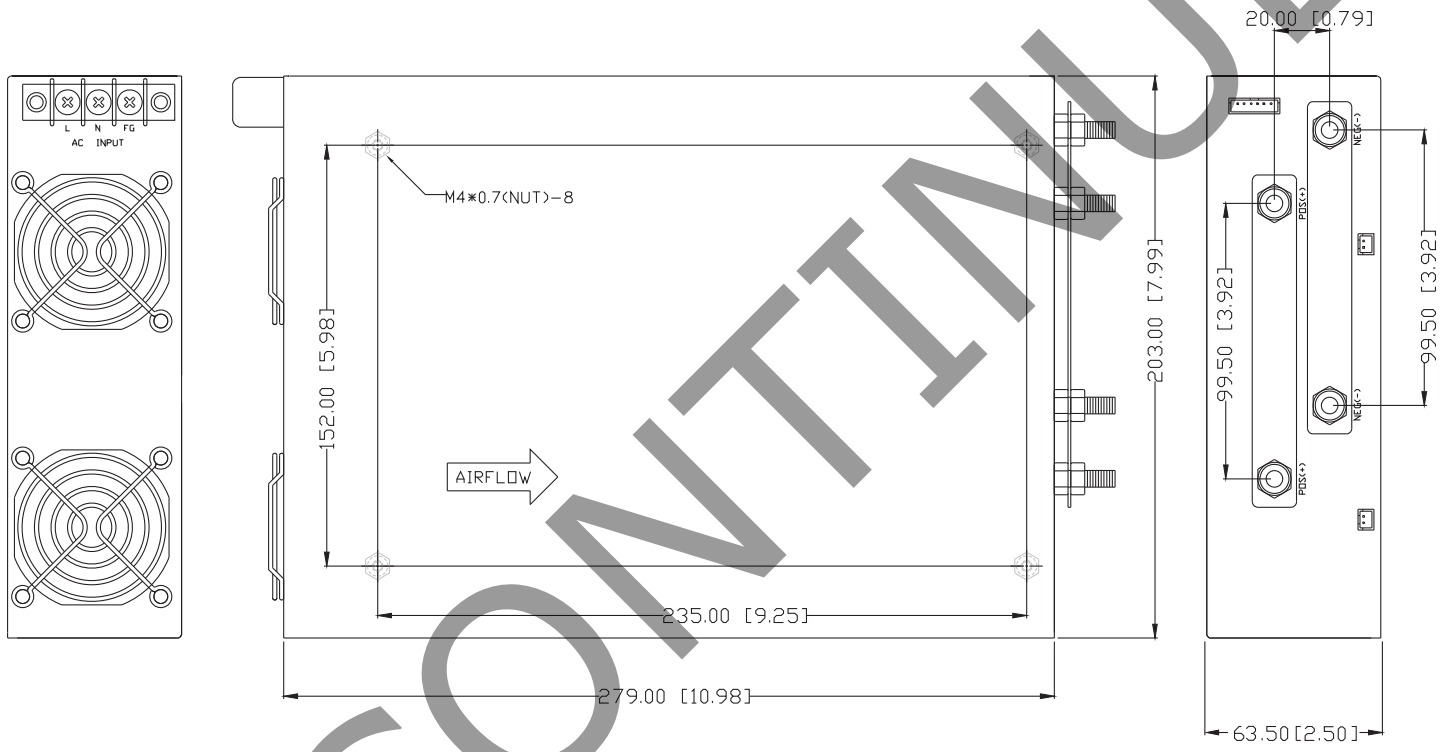

LOGIC CONNECTOR (CN1)		
1	VCI	command input voltage for output programming
2	REF	5 Vdc reference output, can be used to derive VCI
3	PG	power good signal
4	GND	return / output ground
5	INH	inhibit / remote on-off
6	PAR	current sharing / parallel function

REMOTE SENSE (CN2)		
1	VS+	output voltage remote sense+
2	VS-	output voltage remote sense-

DISCONTINUED

LOGIC CONNECTIONS

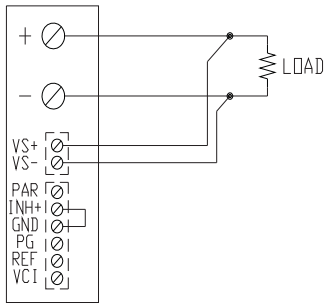

REMOTE SENSING
(FOR REMOTE SENSING MODEL ONLY)

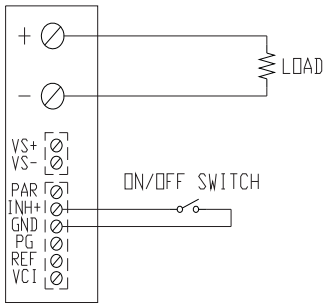

ON/OFF CONTROL BY SWITCH

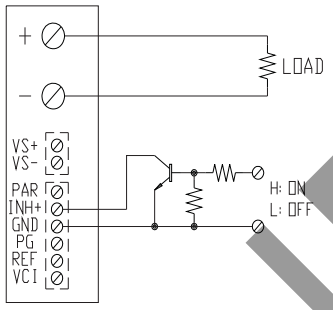

ON/OFF CONTROL BY TRANSISTOR

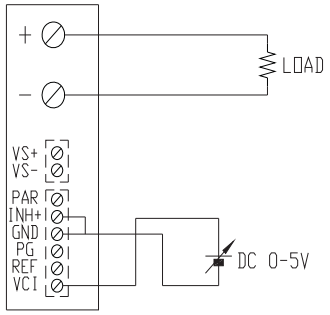

OUTPUT VOLTAGE ADJUST WITH DC 0-5V

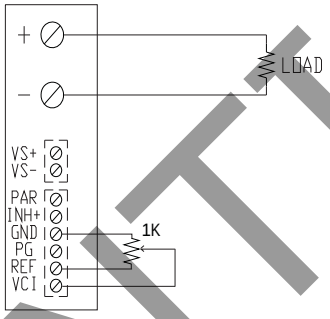

USING INTERNAL VOLTAGE CONTROL

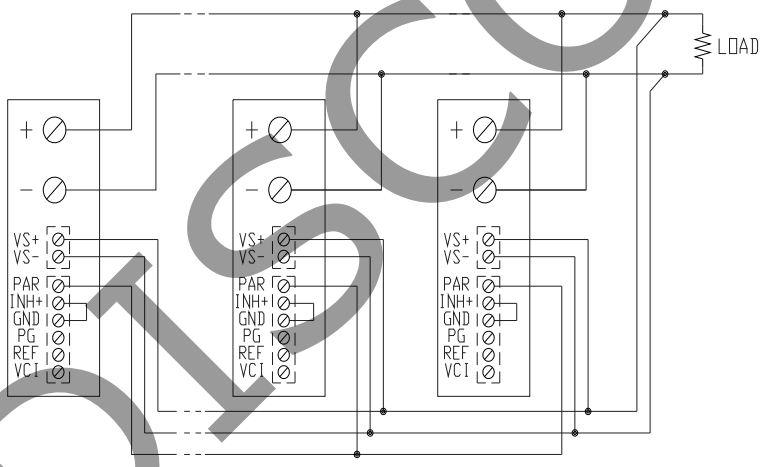

PARALLEL OPERATION WITH REMOTE SENSING

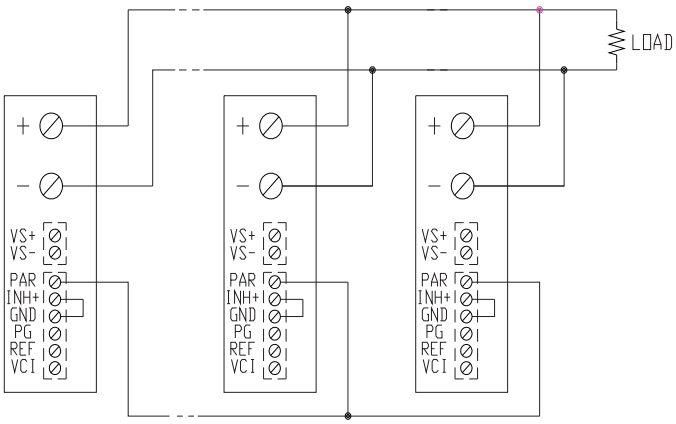

PARALLEL OPERATION WITHOUT REMOTE SENSING

DISCONTINUED

REVISION HISTORY

rev.	description	date
1.0	initial release	02/07/2007
1.01	new template applied	07/02/2009
1.02	V-Infinity branding removed	08/28/2012

The revision history provided is for informational purposes only and is believed to be accurate.

DISCONTINUED

CUI INC®

Headquarters
20050 SW 112th Ave.
Tualatin, OR 97062
800.275.4899

Fax 503.612.2383
cui.com
techsupport@cui.com

CUI offers a two (2) year limited warranty. Complete warranty information is listed on our website.

CUI reserves the right to make changes to the product at any time without notice. Information provided by CUI is believed to be accurate and reliable. However, no responsibility is assumed by CUI for its use, nor for any infringements of patents or other rights of third parties which may result from its use.

CUI products are not authorized or warranted for use as critical components in equipment that requires an extremely high level of reliability. A critical component is any component of a life support device or system whose failure to perform can be reasonably expected to cause the failure of the life support device or system, or to affect its safety or effectiveness.