CUI DEVICES

MODEL: SR-3540-01 | **DESCRIPTION:** AUDIO RECEPTACLE

FEATURES
- 4 conductor
- cable mount
- designed for overmolding

RoHS

SPECIFICATIONS

parameter	conditions/description	min	typ	max	units
rated input voltage			12		Vdc
rated input current				1	A
contact resistance	between plug and receptacle			50	mΩ
insulation resistance	at 500 Vdc	100			MΩ
voltage withstand	for 1 minute			500	Vac
insertion force	when mating with a standard plug	0.4		4	kgf
withdrawal force	when mating with a standard plug	0.4		4	kgf
operating temperature		-25		70	°C
operating humidity				85	%
life			5,000		cycles
flammability rating	see material table				
RoHS	yes				

SOLDERABILITY

parameter	conditions/description	min	typ	max	units
hand soldering	for maximum 1 second	380	400	420	°C

MECHANICAL DRAWING

units: mm
tolerance:
X≤1.0: ±0.1 mm
1.0<X≤6.0: ±0.2 mm
6.0<X≤18.0: ±0.3 mm
18.0<X≤40.0: ±0.4 mm
X>40.0: ±0.5 mm
unless otherwise noted

ITEM	DESCRIPTION	MATERIAL	PLATING/COLOR
1	insulator	POM (UL94HB)	black
2	body	brass	nickel
3	head	brass	nickel
4	terminal 4	phosphor bronze	nickel
5	terminal 1	phosphor bronze	gold
6	terminal 2	phosphor bronze	nickel
7	terminal 3	phosphor bronze	nickel

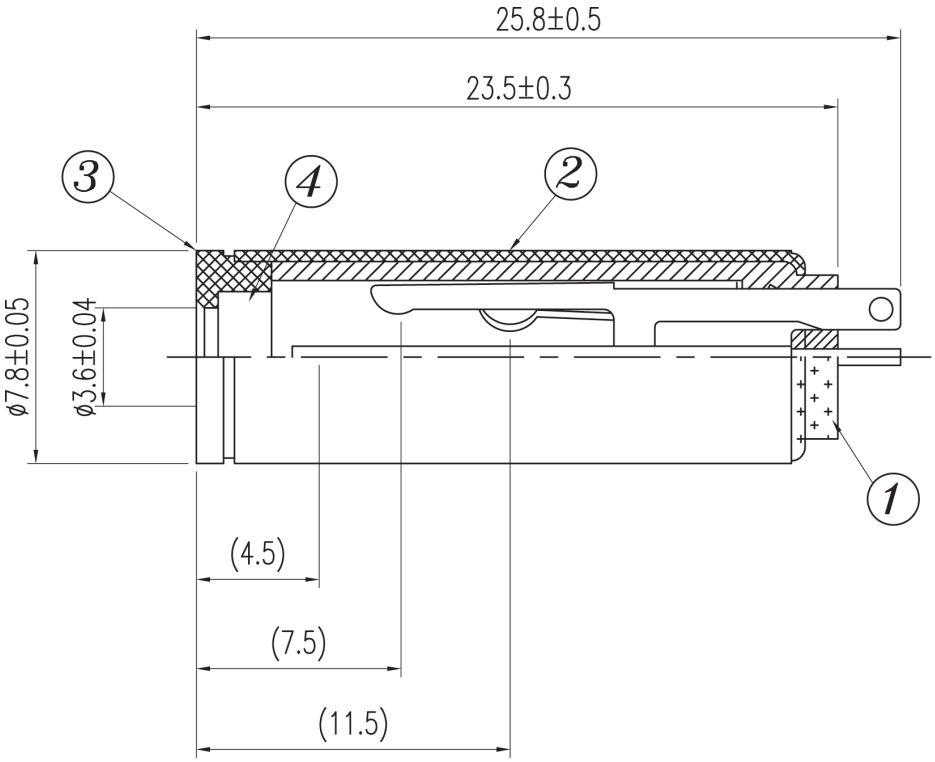

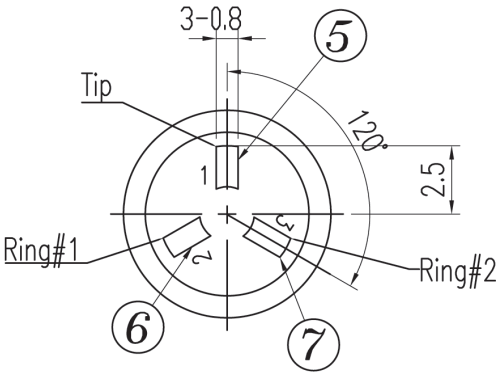

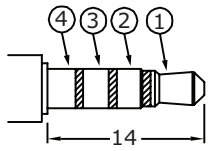

Ø3.5 MATING PLUG

Model No.	SR-3540-01
Schematic	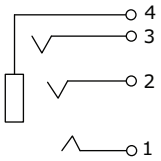
TERMINAL	
1	tip
2	ring 1
3	ring2
4	sleeve

REVISION HISTORY

rev.	description	date
1.0	initial release	06/18/2018
1.01	brand update	10/18/2019

The revision history provided is for informational purposes only and is believed to be accurate.

CUI DEVICES

CUI Devices offers a one (1) year limited warranty. Complete warranty information is listed on our website.

CUI Devices reserves the right to make changes to the product at any time without notice. Information provided by CUI Devices is believed to be accurate and reliable. However, no responsibility is assumed by CUI Devices for its use, nor for any infringements of patents or other rights of third parties which may result from its use.

CUI Devices products are not authorized or warranted for use as critical components in equipment that requires an extremely high level of reliability. A critical component is any component of a life support device or system whose failure to perform can be reasonably expected to cause the failure of the life support device or system, or to affect its safety or effectiveness.