© CUI Devices, 2020

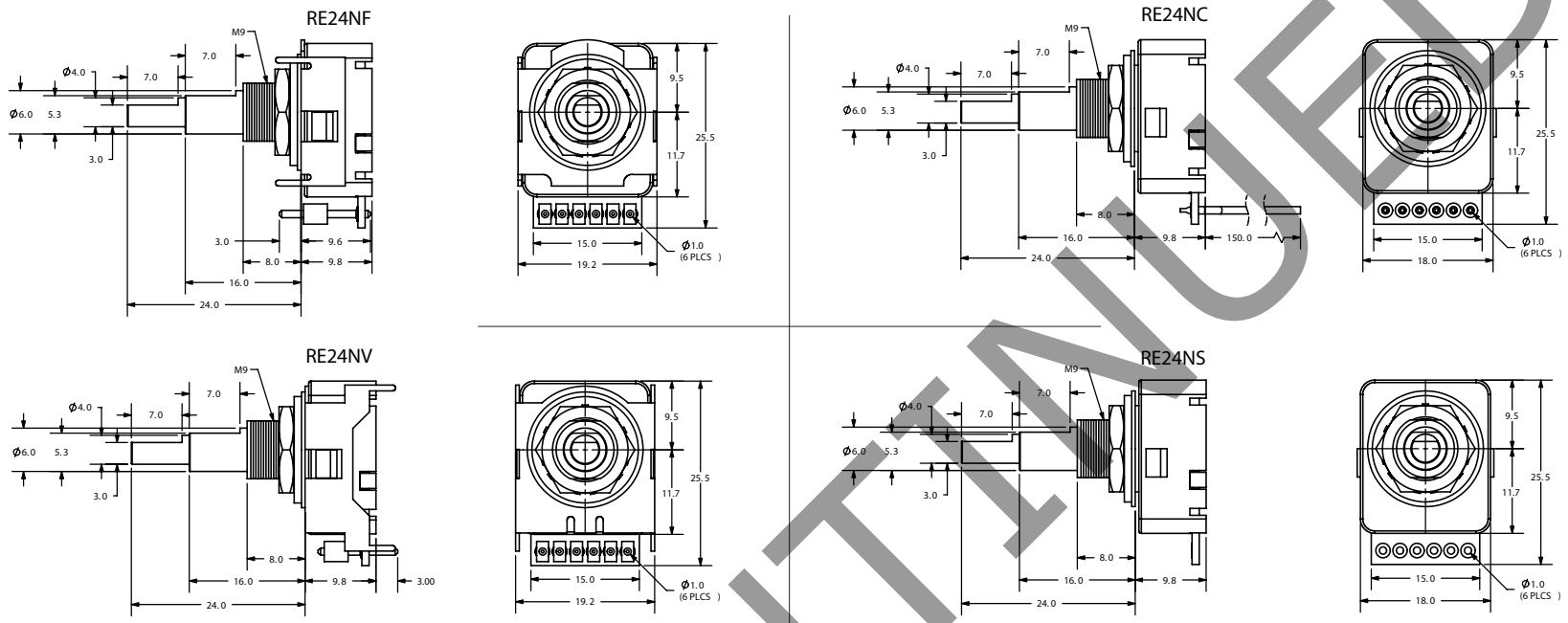

SPECIFICATIONS

ELECTRICAL

1. Input Power: 3.3 or 5.0 VDC ±10%
2. Output Voltage: H = Vcc- 0.5V
   L ≤ 0.5V
3. Resolution: 16 PPR, 25 PPR
4. Output Type: TTL Compatible
5. Max. Freq. Response: 500 Hz

MECHANICAL

1. Max Shaft Load, radial: 5.0 kgf
   axial: 5.0 kgf
2. Rotational Angle: 360° continuous
3. Click Torque: 30~70 gf•cm
4. Rotational Life: 1,000,000 cycles

ENVIRONMENTAL

1. Operating Temp: 0° to +60° C
2. Storage Temp: -20° to +80° C
3. Humidity: ≤85% RH, no condensation
4. Vibration: 10~55 Hz, 1.5 mm, 2 hrs
5. Shock: 50G, 6ms, 3 axes, 3 reps

HOLE LAYOUT

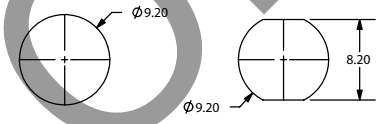

OUTPUT WAVEFORM

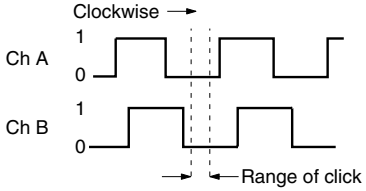

ORDERING INSTRUCTIONS

RE24N□□□C16/24F□

Termination Options:
C = Cable Type
F = Front Mount
S = Solder Holes
V = Vertical Mount

Resolution:
16 = 16 PPR
25 = 25 PPR

Detent:
C = Click

Input Voltage:
A = 5VDC ±10%
B = 3.3VDC ±10%

RoHS

CUI Devices
6405 SW Rosewood St, Suite C
Lake Oswego, OR 97035
www.cuidevices.com

DRAWN BY	UPDATED	CHECKED	RELEASED
AJR	09/01/20	09/01/20	

PART NO.	REV.
RE24NXXXC16/24FX	A

DISCONTINUED