CUI INC
a bel group

SERIES: PYBJ10 | DESCRIPTION: DC-DC CONVERTER

FEATURES

- up to 10 W isolated output
- 4:1 input range (9~36 Vdc)
- single regulated output
- output over-voltage protection, over-current protection, short-circuit protection
- efficiency up to 88%
- DIP and SMT mounting styles
- available with or without case
- UL 62368-1 approved
- designed to meet EN/BS EN 62368-1

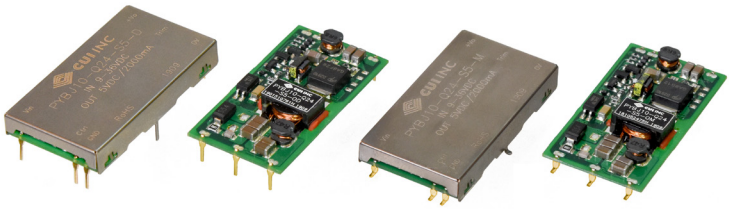

RoHS c UL us

MODEL

MODEL	input voltage typ (Vdc)	input voltage range (Vdc)	output voltage (Vdc)	output current min (mA)	output current max (mA)	output power max (W)	ripple & noise[1] max (mVp-p)	efficiency[2] typ (%)
PYBJ10-Q24-S5	24	9~36	5	0	2000	10	100	84
PYBJ10-Q24-S12	24	9~36	12	0	833	10	100	87
PYBJ10-Q24-S15	24	9~36	15	0	667	10	100	88

Notes:
1. From 5~100% load, nominal input, 20 MHz bandwidth oscilloscope, with 10 µF tantalum and 1 µF ceramic capacitors on the output. From 0~5% load, ripple and noise is <5% Vo.
2. Measured at nominal input voltage, full load.
3. All specifications are measured at Ta=25°C, humidity < 75%, nominal input voltage, and rated output load unless otherwise specified.

PART NUMBER KEY

PYBJ10 - Q24 - SXX - X X

- PYBJ10: Base Number
- Q24: Input Voltage
- SXX: Output Voltage
- X: Case: "blank" = with case; O = no case
- X: Mounting Style: D = DIP; M = SMT

INPUT

parameter	conditions/description	min	typ	max	units
operating input voltage		9	24	36	Vdc
start-up voltage				9	Vdc
surge voltage	for 1 second max	-0.7		50	Vdc
under voltage shutdown		5.5	6.5		Vdc
current	5 Vdc output models 12 Vdc output models 15 Vdc output models			508 490 485	mA mA mA
remote on/off (CTRL)[4]	turn on (CTRL pin pulled low to GND (0~1.2 Vdc)) turn off (CTRL pin open or pulled high (2.4~12 Vdc)) input current when switched off		6		mA
filter	Pi filter				
no load power consumption			0.1		W

Notes: 4. The voltage of the CTRL pin is referenced to input GND pin.

OUTPUT

parameter	conditions/description	min	typ	max	units
maximum capacitive load[5]	5 Vdc output models 12 Vdc output models 15 Vdc output models			2,200 680 470	µF µF µF
voltage accuracy	from 0% to full load		±1	±3	%
line regulation	from low line to high line, full load		±0.2	±0.5	%
load regulation[6]	from 5% to full load		±0.5	±1	%
adjustability	see application notes		±5		%
switching frequency[7]	PWM mode		350		kHz
transient recovery time	25% load step change, nominal input voltage		300	500	µs
transient response deviation	25% load step change, nominal input voltage		±3	±5	%
temperature coefficient	at full load			±0.03	%/°C

Note: 5. Tested at input voltage range and full load.
6. At 0~100% load, the max load regulation is ±5%.
7. Value is based on full load. At loads <50%, the switching frequency decreases with decreasing load for efficiency improvement.

PROTECTIONS

parameter	conditions/description	min	typ	max	units
over voltage protection		110		160	%
over current protection		110	140	200	%
short circuit protection	hiccup, continuous, auto recovery				

SAFETY AND COMPLIANCE

parameter	conditions/description	min	typ	max	units
isolation voltage	input to output for 1 minute at 5 mA input to case[8] for 1 minute at 5 mA output to case[8] for 1 minute at 5 mA input to output for 1 minute at 1 mA input to case[8] for 1 minute at 1 mA output to case[8] for 1 minute at 1 mA	500 500 500 1,500 1,500 1,500			Vac Vac Vac Vdc Vdc Vdc
isolation resistance	input to output at 500 Vdc input to case[8] at 500 Vdc output to case[8] at 500 Vdc	100 100 100			MΩ MΩ MΩ
isolation capacitance	input to output, 100 kHz / 0.1 V		1,000		pF
safety approvals	certified to 62368-1: UL designed to meet 62368-1: EN, BS EN				
conducted emissions	CISPR32/EN55032, class A (no external circuit); class B (external circuit required, see Figure 2-a)				
radiated emissions	CISPR32/EN55032, class B (external circuit required, see Figure 2-a)				
ESD	IEC/EN61000-4-2, contact ±6 kV, class B				
radiated immunity	IEC/EN61000-4-3, 10 V/m, class A				
EFT/burst	IEC/EN61000-4-4, ±2 kV, class B (external circuit required, see Figure 2-b)				
surge	IEC/EN61000-4-5, line-line ±2 kV, class B (external circuit required, see Figure Figure 2-b)				
conducted immunity	IEC/EN61000-4-6, 3 Vr.m.s, class A				
MTBF	as per MIL-HDBK-217F, 25°C	1,000,000			hours
RoHS	yes				

Note: 8. Only applies to versions with case.

ENVIRONMENTAL

parameter	conditions/description	min	typ	max	units
operating temperature	see derating curves	-40		85	°C
storage temperature		-55		125	°C
storage humidity	non-condensing	5		95	%
vibration	10~150 Hz, for 90 minutes on each axis		5		G

DERATING CURVES

TEMPERATURE DERATING CURVE (20 LFM, 5 Vdc output models)

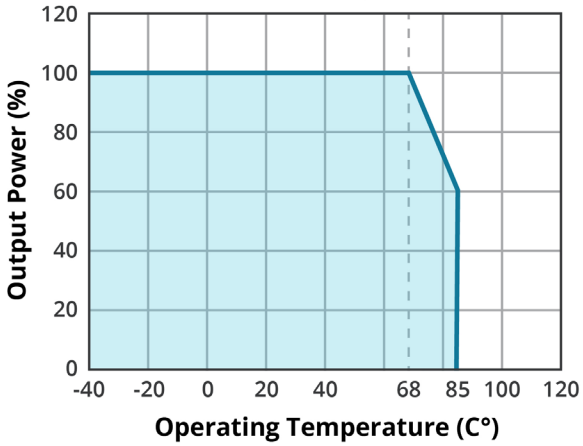

TEMPERATURE DERATING CURVE (20 LFM, all other output models)

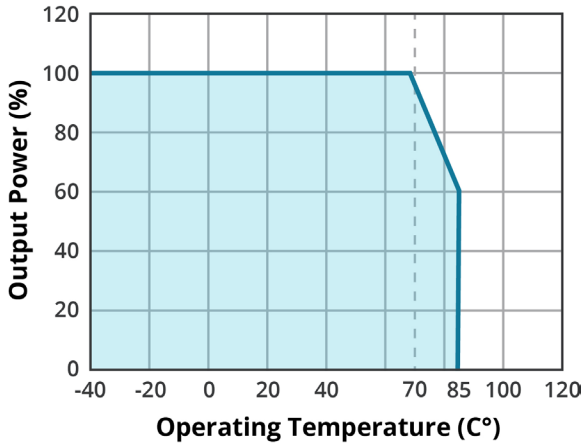

SOLDERABILITY

parameter	conditions/description	min	typ	max	units
hand soldering	1.5 mm from case for 10 seconds			300	°C
wave soldering[9]	see wave soldering profile			260	°C
reflow soldering[10]	see reflow soldering profile Maximum duration >217°C is 60 seconds. For actual application, refer to IPC/JEDEC J-STD-020D.1			245	°C

Note: 9. For DIP models only.
10. For SMT modesl only.

WAVE SOLDERING PROFILE (DIP models)

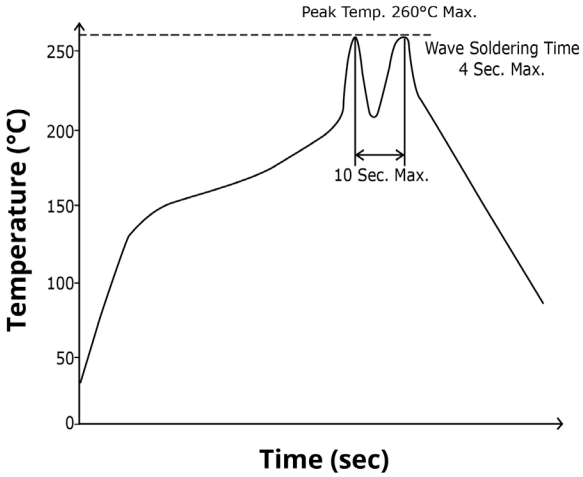

REFLOW SOLDERING PROFILE (SMT models)

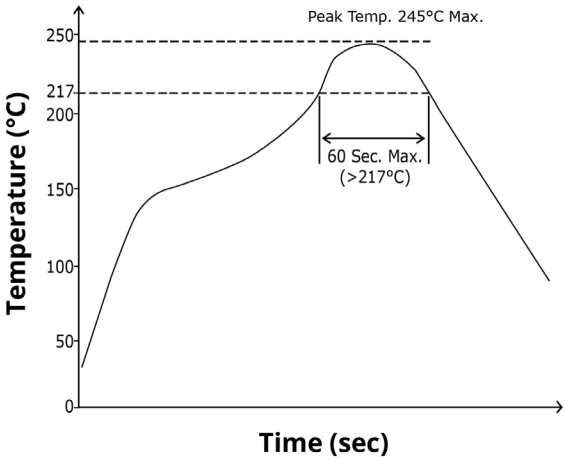

MECHANICAL

parameter	conditions/description	min	typ	max	units
dimensions	DIP without case: 39.20 x 20.80 x 6.10 [1.543 x 0.819 x 0.240 inch]				mm
	DIP with case: 40.20 x 22.00 x 6.80 [1.583 x 0.866 x 0.268 inch]				mm
	SMT without case: 39.20 x 20.80 x 6.30 [1.543 x 0.819 x 0.248 inch]				mm
	SMT with case: 40.20 x 22.00 x 7.00 [1.583 x 0.866 x 0.276 inch]				mm
case material	aluminum alloy				
weight	models without case		5.7		g
	models with case		6.7		g

MECHANICAL DRAWING (DIP WITHOUT CASE)

units: mm [inch]
tolerance: ±0.50[±0.020]
pin section tolerance: ±0.10[±0.004]

PIN CONNECTIONS	
PIN	Function
1	Vin
2	CTRL
3	GND
4	0V
5	trim
6	+Vo

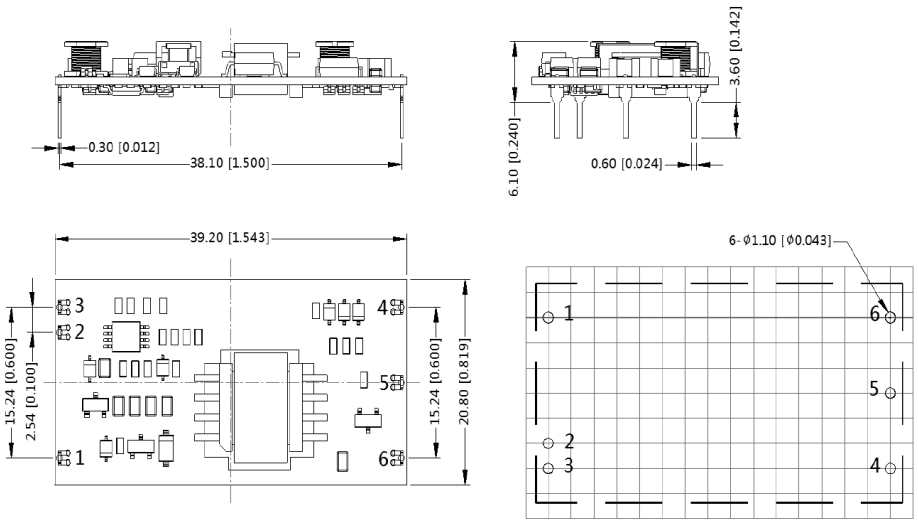

Note: Grid 2.54*2.54mm

Recommended PCB Layout
Top View

MECHANICAL DRAWING (DIP WITH CASE)

units: mm [inch]
tolerance: ±0.50[±0.020]
pin section tolerance: ±0.10[±0.004]

PIN CONNECTIONS	
PIN	Function
1	Vin
2	CTRL
3	GND
4	0V
5	trim
6	+Vo

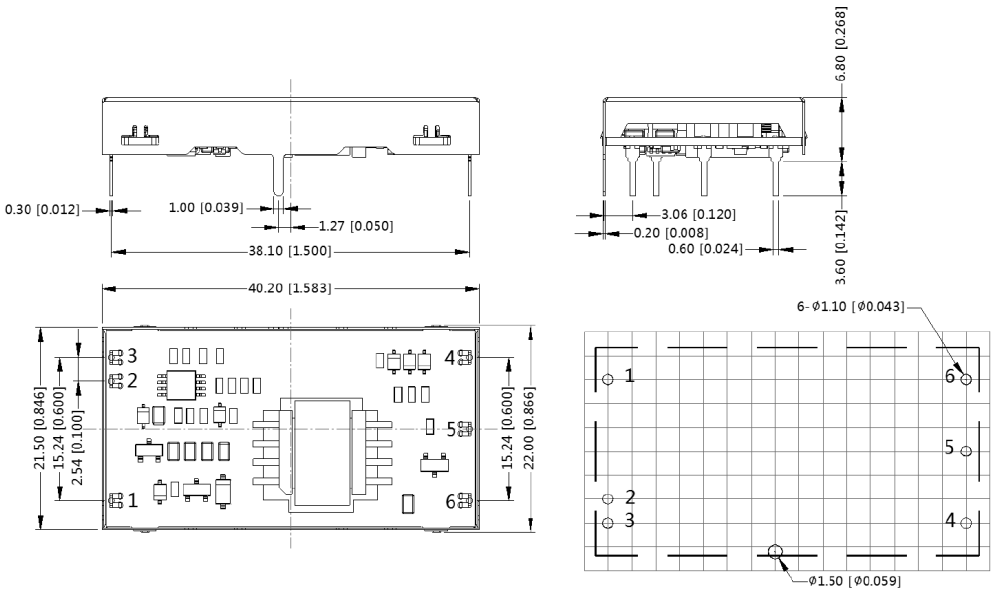

Note: Grid 2.54*2.54mm

Recommended PCB Layout
Top View

MECHANICAL DRAWING (SMT WITHOUT CASE)

units: mm [inch]
tolerance: ±0.50[±0.020]
pin section tolerance: ±0.10[±0.004]

PIN CONNECTIONS	
PIN	Function
1	Vin
2	CTRL
3	GND
4	0V
5	trim
6	+Vo

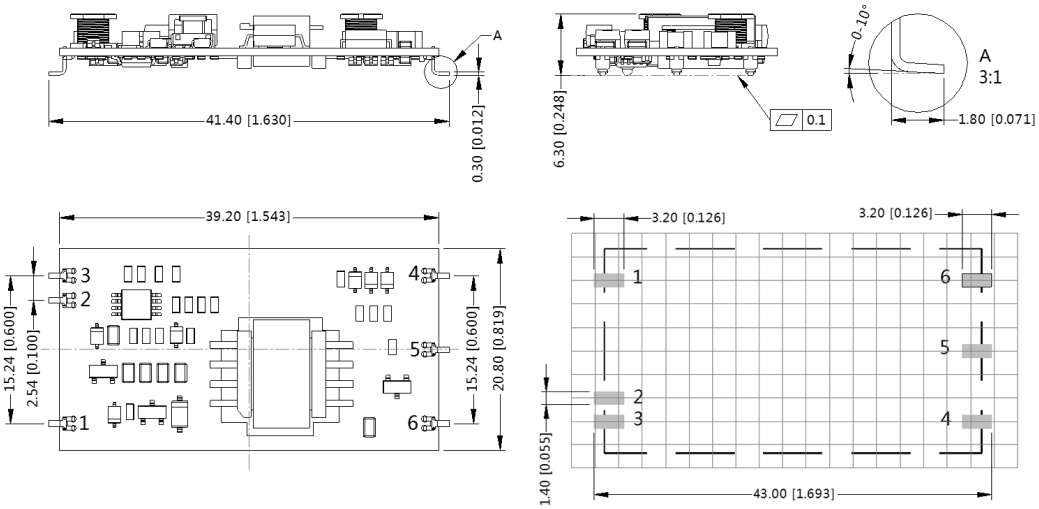

Note: Grid 2.54*2.54mm
Recommended PCB Layout
Top View

MECHANICAL DRAWING (SMT WITH CASE)

units: mm [inch]
tolerance: ±0.50[±0.020]
pin section tolerance: ±0.10[±0.004]

PIN CONNECTIONS	
PIN	Function
1	Vin
2	CTRL
3	GND
4	0V
5	trim
6	+Vo

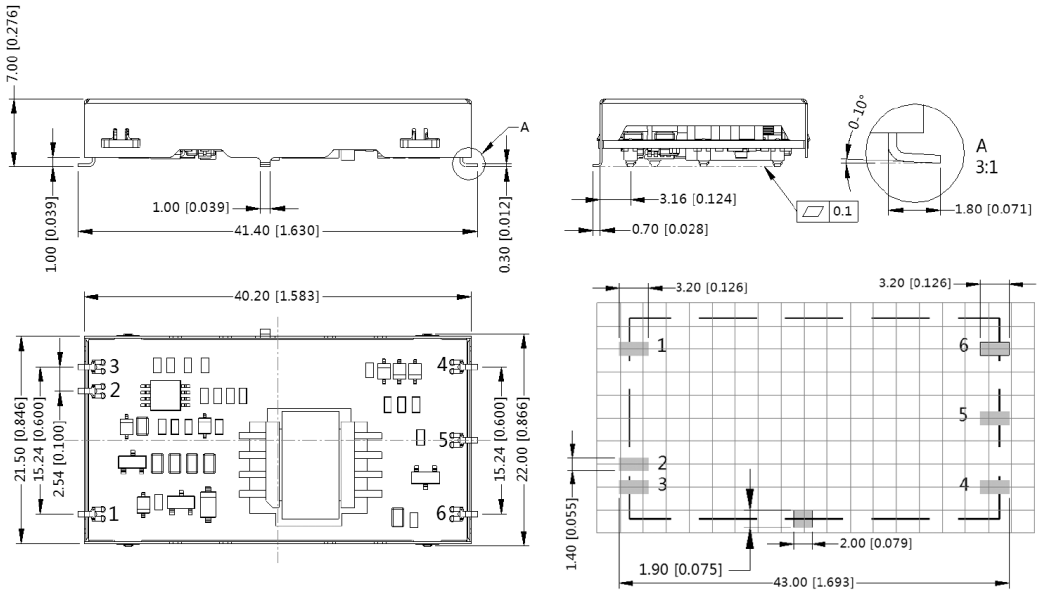

Note: Grid 2.54*2.54mm
Recommended PCB Layout
Top View

APPLICATION CIRCUIT

This series has been tested according to the following recommended circuit (Figure 1) before leaving the factory. If you want to further reduce the input and output ripple, you can increase the input and output capacitors or select capacitors of low equivalent impedance provided that the capacitance is less than the maximum capacitive load of the model.

Figure 1

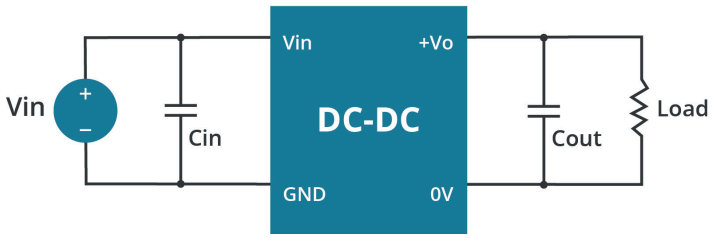

Table 1

Vout (Vdc)	Cin (µF)	Cout (µF)
5/12/15	10	100

EMC RECOMMENDED CIRCUIT

Figure 2

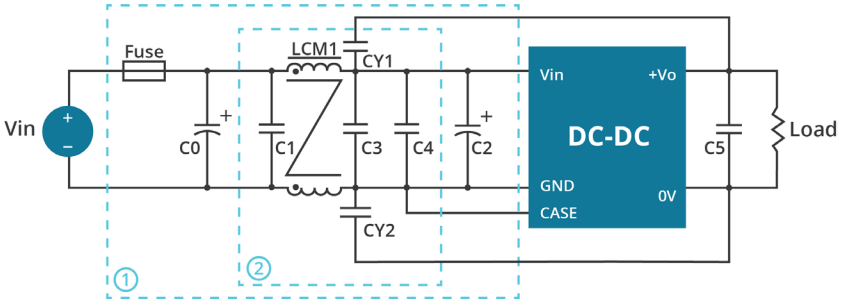

Table 2

Recommended External Circuit Components	
Vin (Vdc)	24
FUSE	choose according to actual input current
C0	680 µF / 100 V
C1, C3, C4	4.7 µF / 50 V
C2	470 µF / 100 V
C5	10 µF / 25 V
LCM	3.3 mH
CY1, CY2	1000 pF / 2 kV

APPLICATION NOTES

Output voltage trimming
Leave open if not used.

Figure 3

Trim up

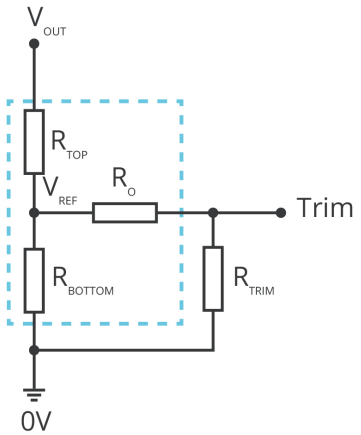

Trim down

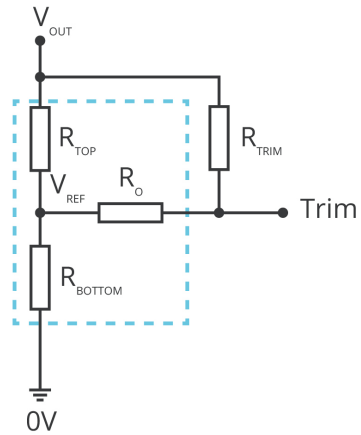

$$R_{TRIM} = \frac{a \cdot R_{BOTTOM}}{R_{BOTTOM} - a} - R_O \qquad a = \frac{V_{REF}}{V_{OUT} - V_{REF}} \cdot R_{TOP}$$

Formula for Trim up

$$R_{TRIM} = \frac{a \cdot R_{TOP}}{R_{TOP} - a} - R_O \qquad a = \frac{V_{OUT} - V_{REF}}{V_{REF}} \cdot R_{BOTTOM}$$

Formula for Trim down

Table 3

V_{OUT}	R_{TOP}	R_{BOTTOM}	R_O	V_{REF}
(Vdc)	(kΩ)	(kΩ)	(kΩ)	(V)
5	2.94	2.87	15	2.5
12	11.00	2.87	17.4	2.5
15	14.50	2.87	15	2.5

Note: Value for R_{TOP}, R_{BOTTOM}, R_O, and V_{REF} refer to Table 3 (fixed internal values).
R_{TRIM}: Trim resistance
a: User-defined parameter, no actual meanings
V_{OUT}: Nominal output voltage

REVISION HISTORY

rev.	description	date
1.0	initial release	03/27/2019
1.01	packaging removed	12/16/2020
1.02	derating curves and circuit figures updated	07/22/2021
1.03	datasheet updated	12/14/2021
1.04	CE removed	01/24/2023

The revision history provided is for informational purposes only and is believed to be accurate.

CUI INC
a bel group

Headquarters
20050 SW 112th Ave.
Tualatin, OR 97062
800.275.4899

Fax 503.612.2383
cui.com
techsupport@cui.com

CUI offers a two (2) year limited warranty. Complete warranty information is listed on our website.

CUI reserves the right to make changes to the product at any time without notice. Information provided by CUI is believed to be accurate and reliable. However, no responsibility is assumed by CUI for its use, nor for any infringements of patents or other rights of third parties which may result from its use.

CUI products are not authorized or warranted for use as critical components in equipment that requires an extremely high level of reliability. A critical component is any component of a life support device or system whose failure to perform can be reasonably expected to cause the failure of the life support device or system, or to affect its safety or effectiveness.