CUI INC
a bel group



# SERIES: PQP1-M | DESCRIPTION: DC-DC CONVERTER

## FEATURES

- wide 2:1 input range
- single and Dual output options
- 1500 Vdc isolation
- industry standard pin-out
- ultra compact SMD package
- short circuit protection (continuous)
- wide operating temp: -40°C to +85°C
- supports negative output (dual output model)
- designed to meet EN/BS EN 62368

RoHS

## MODEL

| MODEL | input voltage typ (Vdc) | input voltage range (Vdc) | output voltage (Vdc) | output current min (mA) | output current max (mA) | output power max (W) | ripple and noise[1] max (mVp-p) | efficiency typ (%) |
|---|---|---|---|---|---|---|---|---|
| PQP1-D12-S3-M | 12 | 9~18 | 3.3 | 15 | 303 | 1 | 150 | 75 |
| PQP1-D12-S5-M | 12 | 9~18 | 5 | 10 | 200 | 1 | 150 | 77 |
| PQP1-D12-S12-M | 12 | 9~18 | 12 | 4 | 83 | 1 | 150 | 79 |
| PQP1-D12-S15-M | 12 | 9~18 | 15 | 3 | 67 | 1 | 150 | 80 |
| PQP1-D12-S24-M | 12 | 9~18 | 24 | 2 | 42 | 1 | 150 | 76 |
| PQP1-D24-S3-M | 24 | 18~36 | 3.3 | 15 | 303 | 1 | 100 | 75 |
| PQP1-D24-S5-M | 24 | 18~36 | 5 | 10 | 200 | 1 | 100 | 77 |
| PQP1-D24-S12-M | 24 | 18~36 | 12 | 4 | 83 | 1 | 100 | 78 |
| PQP1-D24-S15-M | 24 | 18~36 | 15 | 3 | 67 | 1 | 100 | 78 |
| PQP1-D24-S24-M | 24 | 18~36 | 24 | 2 | 42 | 1 | 100 | 77 |
| PQP1-D12-D5-M | 12 | 9~18 | ±5 | ±5 | ±100 | 1 | 150 | 77 |
| PQP1-D12-D9-M | 12 | 9~18 | ±9 | ±2 | ±56 | 1 | 150 | 80 |
| PQP1-D12-D12-M | 12 | 9~18 | ±12 | ±2 | ±42 | 1 | 150 | 80 |
| PQP1-D12-D15-M | 12 | 9~18 | ±15 | ±1.7 | ±33 | 1 | 150 | 77 |
| PQP1-D24-D5-M | 24 | 18~36 | ±5 | ±5 | ±100 | 1 | 100 | 77 |
| PQP1-D24-D9-M | 24 | 18~36 | ±9 | ±2.8 | ±56 | 1 | 100 | 77 |
| PQP1-D24-D12-M | 24 | 18~36 | ±12 | ±2.1 | ±42 | 1 | 100 | 77 |
| PQP1-D24-D15-M | 24 | 18~36 | ±15 | ±1.7 | ±33 | 1 | 100 | 77 |

Notes: 1. Ripple & noise testing condition at nominal input voltage and 5%-100% load, the "tip and barrel" method is used for ripple and noise test, please refer to DC-DC Converter Application Notes for specific information.

## PART NUMBER KEY

PQP1 - DXX - XXX - M

- PQP1 — Base Number
- DXX — Input Voltage
- XXX — Output Voltage
- Output: S = single, D = dual
- M — Packaging Style: SMT

## INPUT

| parameter | conditions/description | min | typ | max | units |
|---|---|---|---|---|---|
| input voltage | 12 Vdc input models<br>24 Vdc input models | 9<br>18 | 12<br>24 | 18<br>36 | Vdc<br>Vdc |
| start-up voltage | 12 Vdc input models<br>24 Vdc input models | | | 9<br>18 | Vdc<br>Vdc |
| surge voltage | for maximum of 1 second<br>12 Vdc input models<br>24 Vdc input models | <br>-0.7<br>-0.7 | | <br>25<br>50 | <br>Vdc<br>Vdc |
| filter | capacitance filter | | | | |
| current | 12 Vdc input models<br>24 Vdc input models | | 108/15<br>54/6 | 112/30<br>56/12 | mA<br>mA |

## OUTPUT

| parameter | conditions/description | min | typ | max | units |
|---|---|---|---|---|---|
| line regulation | min to max Vin<br>positive output<br>negative output | | <br>±0.2<br>±0.5 | <br>±0.5<br>±1 | % |
| load regulation | 5% ~ 100% load<br>positive output<br>negative output | | <br>±0.5 | <br>±1<br>±2 | % |
| set-point accuracy | 5% ~ 100% load<br>positive outputs<br>negative outputs | | <br>±1<br>±3 | <br>±3<br>±5 | <br>%<br>% |
| switching frequency | full load, nominal input | | 300 | | kHz |
| transient response | 25% load step change | | ±3 | ±5 | % |
| temperature coefficient | full load | | | ±0.03 | %/°C |

## PROTECTIONS

| parameter | conditions/description | min | typ | max | units |
|---|---|---|---|---|---|
| short circuit protection | continuous, self-recovery | | | | |

## SAFETY AND COMPLIANCE

| parameter | conditions/description | min | typ | max | units |
|---|---|---|---|---|---|
| isolation voltage | input-output electric strength test for 1 minute | 1500 | | | Vdc |
| isolation resistance | input-output insulation at 500 Vdc | 1000 | | | MΩ |
| isolation capacitance | input-output capacitance at 100 KHz / 0.1 V | | 100 | | pF |
| safety approvals | designed to meet 62368: EN, BS EN | | | | |
| EMC | CISPR32/EN55032 Class B (see recommended circuit) | | | | |
| ESD | IEC/EN61000-4-2, Contact ±6K, perf. Criteria B | | | | |
| radiated immunity | IEC/EN61000-4-3, 10 v/m, perf. Criteria A | | | | |
| EFT/burst | IEC/EN61000-4-4, ±2KV, perf. Criteria B (see recommended circuit) | | | | |
| surge | IEC/EN61000-4-5, line to line ±2KV, perf. Criteria B (see recommended circuit) | | | | |
| conducted immunity | IEC/EN61000-4-6 3 Vrms, perf. Criteria A | | | | |
| RoHS | yes | | | | |
| MTBF | MIL-HDBK-217F @ 25°C | 1000 | | | kHours |

## ENVIRONMENTAL

| parameter | conditions/description | min | typ | max | units |
|---|---|---|---|---|---|
| operating temperature | | -40 | | 85 | °C |
| storage temperature | | -55 | | 125 | °C |
| humidity | non-condensing | 5 | | 95 | % |

## SOLDERABILITY

| parameter | conditions/description | min | typ | max | units |
|---|---|---|---|---|---|
| hand soldering | 1.5 mm from case for 10 seconds | | | 300 | °C |
| reflow soldering | 60 s max over 217°C | | | 245 | °C |

## DERATING CURVE

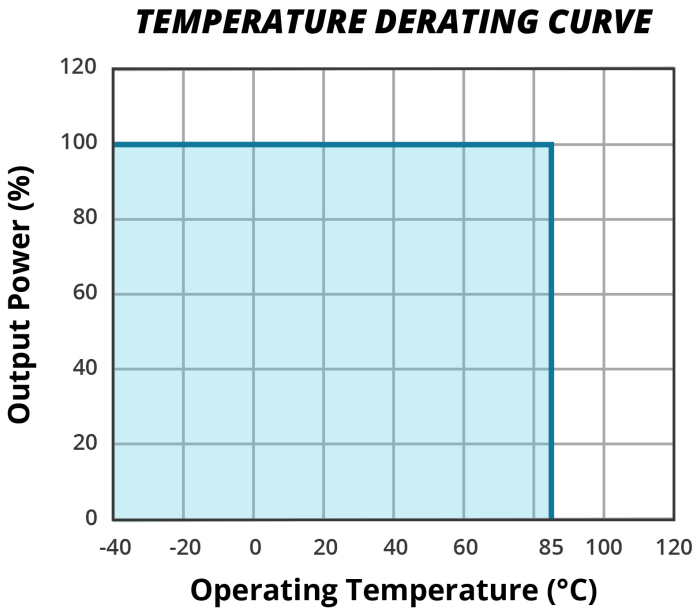

## MECHANICAL

| parameter | conditions/description | min | typ | max | units |
|---|---|---|---|---|---|
| dimensions | 14 x 14 x 9 | | | | mm |
| case material | Black plastic; flame-retardant and heat-resistant (UL94-V0) | | | | |
| weight | | | 2.2 | | g |

## MECHANICAL DRAWING

units: mm [inches]
tolerance: ± 0.50 [±0.020]

| PIN CONNECTIONS | | |
|---|---|---|
| PIN | Single | Dual |
| 1 | GND | GND |
| 4 | Vin | Vin |
| 5 | +Vo | +Vo |
| 6 | NC | 0V |
| 7 | 0V | -Vo |

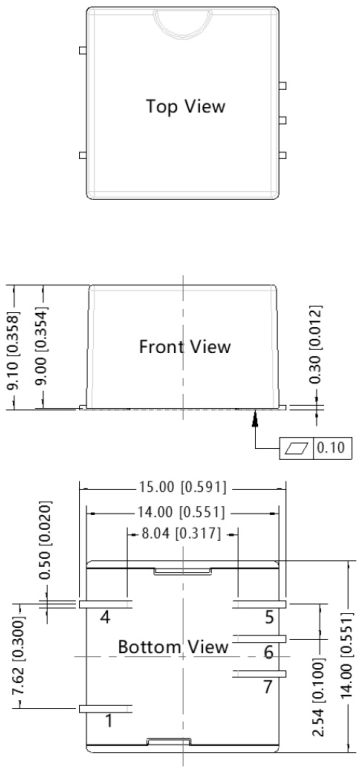


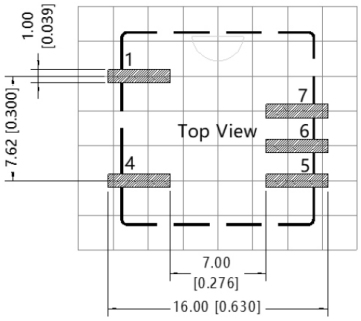


Note: Grid 2.54*2.54mm

## RECOMMENDED CIRCUITS

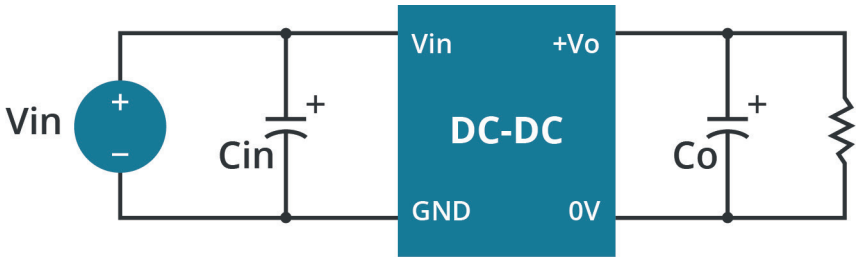


| Parameter Description | | |
|---|---|---|
| Vin (Vdc) | 12 | 24 |
| Cin | 47uF/25V | 47uF/50V |

| | | |
|---|---|---|
| Vo (Vdc) | 3.3, 5 | 12, 15, 24 |
| Cout | 100uF/6.3V | 27uF/35V |

## EMC COMPLIANCE CIRCUITS

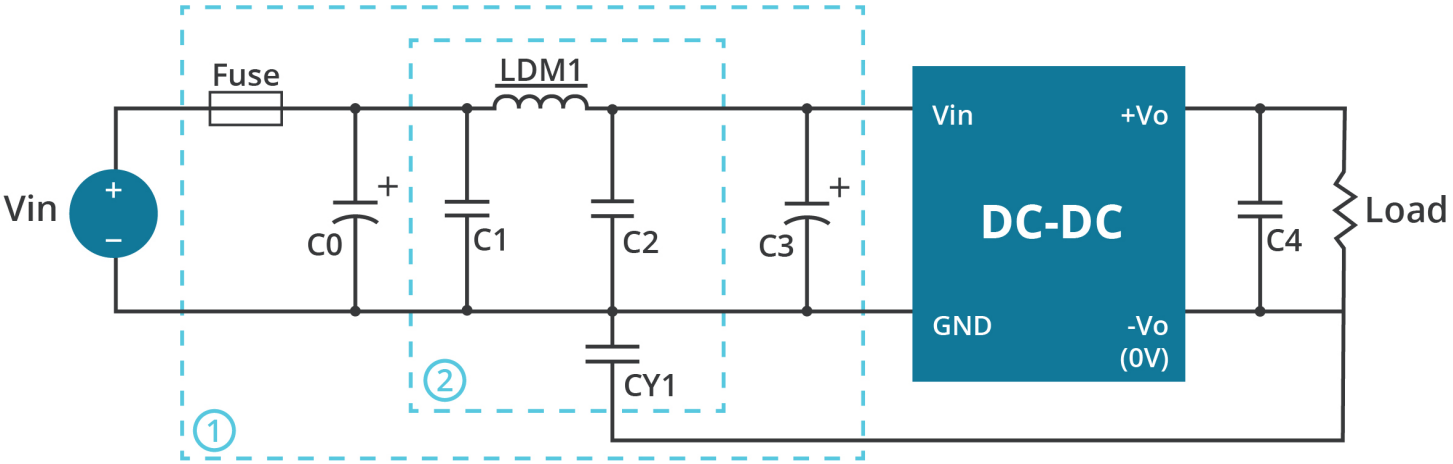


| Parameter Description | | |
|---|---|---|
| Part No. | Vin: 12 Vdc | Vin: 24 Vdc |
| FUSE | slow blow, choose according to actual input current | |
| C0 | 1000μF/25V | 680μF/50V |
| C1 | 4.7μF/50V | |
| LDM1 | 15μH | |
| C2 | 4.7μF/50V | |
| C3 | 330μF/50V | |
| CY1 | 1nF/2KV | |
| C4 | Refer to the Cout Fig.2 | |

## REVISION HISTORY

| rev. | description | date |
|---|---|---|
| 1.0 | initial release | 03/28/2020 |
| 1.01 | measurements updated | 10/30/2020 |
| 1.02 | derating curve and circuit figures updated | 06/30/2021 |
| 1.03 | CE certification removed | 11/22/2022 |

The revision history provided is for informational purposes only and is believed to be accurate.

CUI INC
a bel group

**Headquarters**
20050 SW 112th Ave.
Tualatin, OR 97062
**800.275.4899**

Fax 503.612.2383
**cui**.com
techsupport@cui.com

CUI offers a two (2) year limited warranty. Complete warranty information is listed on our website.

CUI reserves the right to make changes to the product at any time without notice. Information provided by CUI is believed to be accurate and reliable. However, no responsibility is assumed by CUI for its use, nor for any infringements of patents or other rights of third parties which may result from its use.

CUI products are not authorized or warranted for use as critical components in equipment that requires an extremely high level of reliability. A critical component is any component of a life support device or system whose failure to perform can be reasonably expected to cause the failure of the life support device or system, or to affect its safety or effectiveness.