CUI INC
a bel group

SERIES: PQMCE1-S | **DESCRIPTION:** DC-DC CONVERTER

FEATURES

- 1W isolated output
- 1500 Vdc isolation
- compact SIP package
- continuous short circut protection
- no-load input current as low as 5mA
- wide temperature range: -40°C to +85°C
- high efficiency up to 73%
- UL 62368 approval

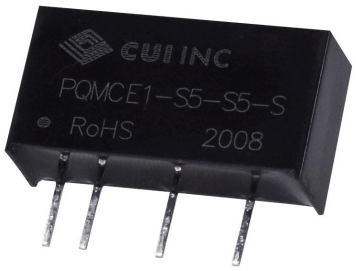

MODEL	input voltage typ (Vdc)	output voltage (Vdc)	output current max (mA)	output power max (W)	ripple and noise max (mVp-p)	efficiency typ (%)
PQMCE1-S5-S3-S	5	3.3	250	.83	75	67
PQMCE1-S5-S5-S	5	5	200	1	75	70
PQMCE1-S5-S9-S	5	9	110	1	75	71
PQMCE1-S5-S12-S	5	12	84	1	75	72
PQMCE1-S5-S15-S	5	15	67	1	75	73
PQMCE1-S5-S24-S	5	24	41	1	100	73

PART NUMBER KEY

PQMCE1 - S5 - XX - S

Base Number — Input Voltage

INPUT

parameter	conditions/description	min	typ	max	units
input voltage		4.75	5	5.25	Vdc
filter	capacitance filter				
current	(full load / no-load) 3.3 Vdc / 5 Vdc output 9 Vdc / 12 Vdc output 15 Vdc / 24 Vdc output		 286/5 282/12 274/18	 303/10 299/20 290/30	 mA mA mA

OUTPUT

parameter	conditions/description	min	typ	max	units
output capacitance	3.3 Vdc output models 5 Vdc output models 9 Vdc output models 12 Vdc output models 15 Vdc output models 24 Vdc output models			2400 2400 1000 560 560 100	µF µF µF µF µF µF
line regulation	input voltage change: ±1%			±0.25	%
load regulation	3.3 Vdc output, 10%~100% load others, 10%~100% load			±3 ±2	% %
switching frequency	100% load, nominal input voltage		270		kHz
temperature coefficient	100% load		±0.02		%/°C

PROTECTIONS

parameter	conditions/description	min	typ	max	units
short circuit protection	continuous, self-recovery				

SAFETY AND COMPLIANCE

parameter	conditions/description	min	typ	max	units
isolation voltage	input to output electric strength test for 1 minute with a leakage current of 1mA max	1500			Vdc
isolation resistance	input to output resistance at 500 Vdc	1000			MΩ
isolation capacitance	input to output capacitance at 100 KHz / 0.1 V		20		pF
safety approvals	certified to 62368: UL designed to meet 62368: EN, BS EN				
EMI /EMC	CISPR32/EN55032 Class B (see recommended circuit)				
ESD	IEC/EN61000-4-2 Air ±8kV, Contact ±4kV perf. Criteria B				
RoHS	yes				
MTBF	as per MIL-HDBK-217F @ 25°C	3500			k Hours

ENVIRONMENTAL

parameter	conditions/description	min	typ	max	units
operating temperature	derating when operating temperature up to 71°C	-40		85	°C
storage temperature		-55		125	°C
humidity	non-condensing			95	%
shock/vibration	10-150Hz, 5G, 30 Min. along X, Y and Z				

MECHANICAL

parameter	conditions/description	min	typ	max	units
dimensions	19.65 x 6.00 x 10.16				mm
case material	black plastic; flame-retardant and heat-resistant (UL94 V-0)				
weight			2.1		g

MECHANICAL DRAWING

units: mm [inches]
tolerance: ± 0.25 [±0.010]
pin section tolerances: ± 0.10 [±0.004]

PIN-OUT	
PIN	FUNCTION
1	Vin
2	GND
4	0V
6	+Vo

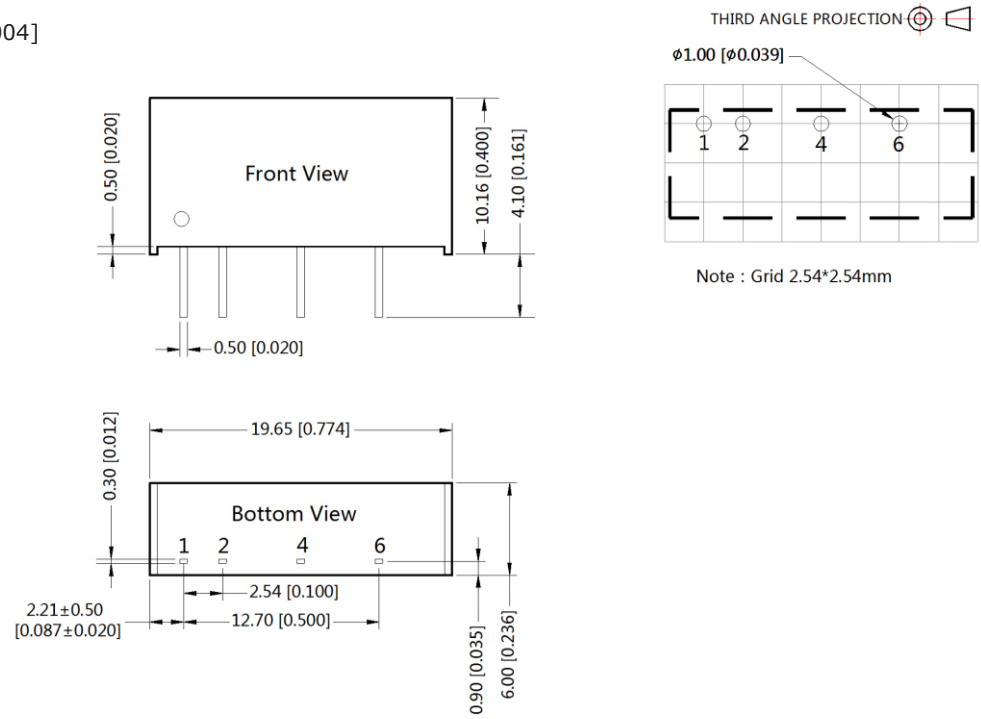

DERATING CURVE

Figure 1

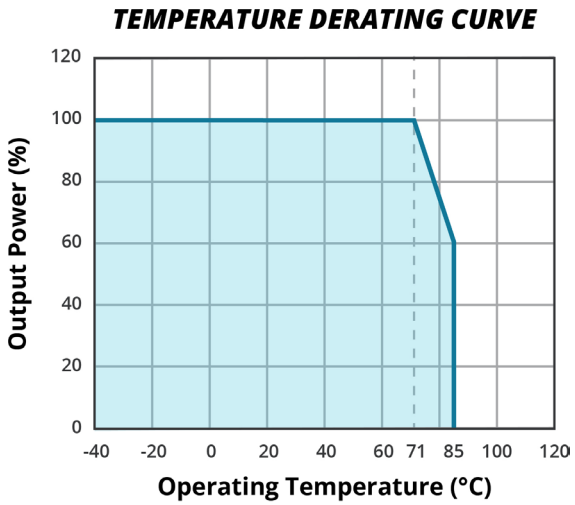

APPLICATION CIRCUIT

Input and/or output ripple can be further reduced, by connecting a filter capacitor from the input and/or output terminals to ground as shown in Fig.2.
Choosing suitable filter capacitor values is very important for a smooth operation of the modules, particularly to avoid start-up problems caused by capacitor values that are too high. For recommended input and output capacitor values refer to Table 1.

Figure 2

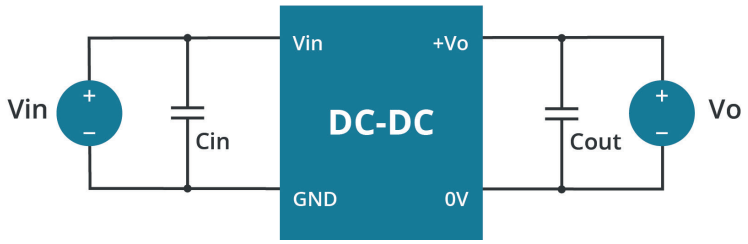

Table 1

Recommended Input & Output Capacitor Values			
Vin (Vdc)	Cin (µF)	Vo (Vdc)	Cout (µF)
5	4.7	3.3/5	10
- -	- -	9/12	2.2
- -	- -	15	1

EMC RECOMMENDED CIRCUITS

Figure 3

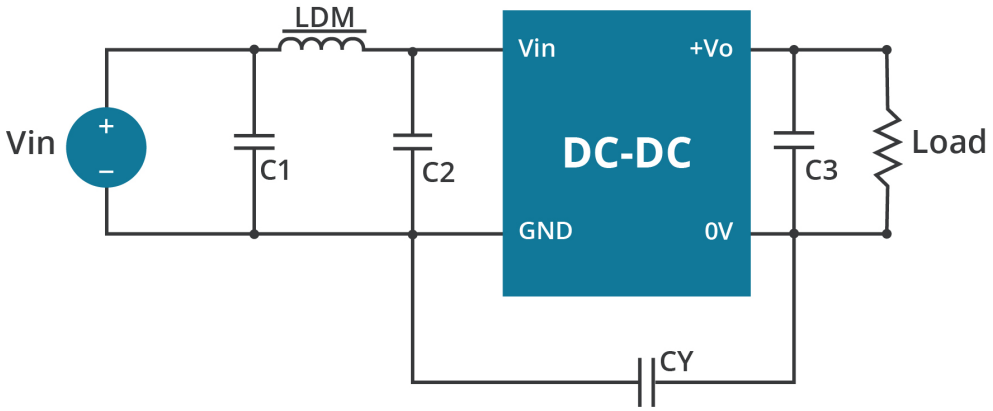

Table 2

Recommended EMC Filter Values					
Model	C1	C2	CY	C3	LDM
PQMCE1-S5-S3-S	4.7µF /25V	4.7µF /25V	- -	see Cout in table 1	6.8µH
PQMCE1-S5-S5-S	4.7µF /25V	4.7µF /25V	- -	see Cout in table 1	6.8µH
PQMCE1-S5-S9-S	4.7µF /25V	4.7µF /25V	- -	see Cout in table 1	6.8µH
PQMCE1-S5-S12-S	4.7µF /25V	4.7µF /25V	1nF/4KVdc	see Cout in table 1	6.8µH
PQMCE1-S5-S15-S	4.7µF /25V	4.7µF /25V	1nF/4KVdc	see Cout in table 1	6.8µH
PQMCE1-S5-S24-S	4.7µF /25V	4.7µF /25V	1nF/4KVdc	see Cout in table 1	6.8µH

REVISION HISTORY

rev.	description	date
1.0	initial release	03/09/2020
1.01	datasheet update	12/14/2020
1.03	derating curve and circuit figures updated	06/30/2021
1.04	CE certification removed	11/16/2022

The revision history provided is for informational purposes only and is believed to be accurate.

CUI INC
a bel group

Headquarters
20050 SW 112th Ave.
Tualatin, OR 97062
800.275.4899

Fax 503.612.2383
cui.com
techsupport@cui.com

CUI offers a two (2) year limited warranty. Complete warranty information is listed on our website.

CUI reserves the right to make changes to the product at any time without notice. Information provided by CUI is believed to be accurate and reliable. However, no responsibility is assumed by CUI for its use, nor for any infringements of patents or other rights of third parties which may result from its use.

CUI products are not authorized or warranted for use as critical components in equipment that requires an extremely high level of reliability. A critical component is any component of a life support device or system whose failure to perform can be reasonably expected to cause the failure of the life support device or system, or to affect its safety or effectiveness.