CUI INC
a bel group



# SERIES: PDS1-S | DESCRIPTION: DC-DC CONVERTER

## FEATURES

- 1 W isolated output
- smaller package
- single unregulated output
- 1,500 Vdc isolation
- short circuit protection
- extended temperature range (-40~105°C)
- antistatic protection up to 8kV
- high efficiency at light load
- efficiency up to 80%

RoHS c UL us

| MODEL | input voltage | | output voltage | output current | | output power | ripple and noise[2] | efficiency |
|---|---|---|---|---|---|---|---|---|
| | typ (Vdc) | range (Vdc) | (Vdc) | min (mA) | max (mA) | max (W) | typ (mVp-p) | typ (%) |
| PDS1-S3-S3-S | 3.3 | 2.97~3.63 | 3.3 | 30 | 303 | 1 | 60 | 72 |
| PDS1-S3-S5-S[1,*] | 3.3 | 2.97~3.63 | 5 | 20 | 200 | 1 | 60 | 76 |
| PDS1-S5-S3-S* | 5 | 4.5~5.5 | 3.3 | 30 | 303 | 1 | 60 | 72 |
| PDS1-S5-S5-S[1] | 5 | 4.5~5.5 | 5 | 20 | 200 | 1 | 60 | 80 |
| PDS1-S5-S9-S[1,*] | 5 | 4.5~5.5 | 9 | 12 | 111 | 1 | 60 | 80 |
| PDS1-S5-S12-S[1,*] | 5 | 4.5~5.5 | 12 | 9 | 84 | 1 | 60 | 80 |
| PDS1-S5-S15-S[1,*] | 5 | 4.5~5.5 | 15 | 7 | 67 | 1 | 60 | 80 |
| PDS1-S5-S24-S[1,*] | 5 | 4.5~5.5 | 24 | 4 | 42 | 1 | 60 | 80 |
| PDS1-S12-S3-S* | 12 | 10.8~13.2 | 3.3 | 30 | 303 | 1 | 60 | 72 |
| PDS1-S12-S5-S[1,*] | 12 | 10.8~13.2 | 5 | 20 | 200 | 1 | 60 | 80 |
| PDS1-S12-S9-S[1,*] | 12 | 10.8~13.2 | 9 | 12 | 111 | 1 | 60 | 80 |
| PDS1-S12-S12-S[1] | 12 | 10.8~13.2 | 12 | 9 | 83 | 1 | 60 | 80 |
| PDS1-S12-S15-S[1,*] | 12 | 10.8~13.2 | 15 | 7 | 67 | 1 | 60 | 80 |
| PDS1-S15-S5-S* | 15 | 13.5~16.5 | 5 | 20 | 200 | 1 | 60 | 80 |
| PDS1-S15-S12-S* | 15 | 13.5~16.5 | 12 | 9 | 83 | 1 | 60 | 80 |
| PDS1-S15-S15-S | 15 | 13.5~16.5 | 15 | 7 | 67 | 1 | 60 | 80 |
| PDS1-S24-S3-S* | 24 | 21.6~26.4 | 3.3 | 30 | 303 | 1 | 60 | 72 |
| PDS1-S24-S5-S[1,*] | 24 | 21.6~26.4 | 5 | 20 | 200 | 1 | 60 | 80 |
| PDS1-S24-S9-S[1,*] | 24 | 21.6~26.4 | 9 | 12 | 111 | 1 | 60 | 80 |
| PDS1-S24-S12-S[1,*] | 24 | 21.6~26.4 | 12 | 9 | 84 | 1 | 60 | 80 |
| PDS1-S24-S15-S[1] | 24 | 21.6~26.4 | 15 | 7 | 67 | 1 | 60 | 80 |
| PDS1-S24-S24-S[1] | 24 | 21.6~26.4 | 24 | 4 | 42 | 1 | 60 | 80 |

Notes:
1. Model is UL approved.
2. Ripple and noise are measured at 20 MHz BW by "parallel cable" method with 1 µF ceramic and 10 µF electrolytic capacitors on the output.
3. * Discontinued model.

## PART NUMBER KEY

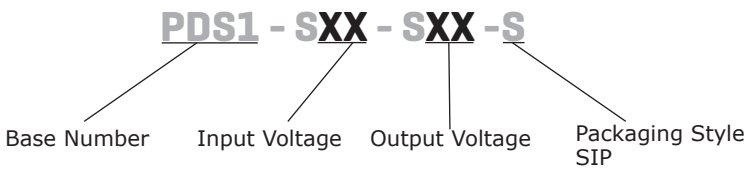


## INPUT

| parameter | conditions/description | min | typ | max | units |
|---|---|---|---|---|---|
| operating input voltage | 3.3 Vdc input models | 2.97 | 3.3 | 3.63 | Vdc |
| | 5 Vdc input models | 4.5 | 5 | 5.5 | Vdc |
| | 12 Vdc input models | 10.8 | 12 | 13.2 | Vdc |
| | 15 Vdc input models | 13.5 | 15 | 16.5 | Vdc |
| | 24 Vdc input models | 21.6 | 24 | 26.4 | Vdc |
| surge voltage | for maximum of 1 second | | | | |
| | 3.3 Vdc input models | -0.7 | | 5 | Vdc |
| | 5 Vdc input models | -0.7 | | 9 | Vdc |
| | 12 Vdc input models | -0.7 | | 18 | Vdc |
| | 15 Vdc input models | -0.7 | | 21 | Vdc |
| | 24 Vdc input models | -0.7 | | 30 | Vdc |
| filter | capacitance filter | | | | |

## OUTPUT

| parameter | conditions/description | min | typ | max | units |
|---|---|---|---|---|---|
| line regulation | for Vin change of 1% | | | | |
| | 3.3 Vdc output models | | | ±1.5 | % |
| | all other models | | | ±1.2 | % |
| load regulation | measured from 10% load to full load | | | | |
| | 3.3 Vdc output models | | 18 | | % |
| | 5 Vdc output models | | 12 | | % |
| | 9 Vdc output models | | 8 | | % |
| | 12 Vdc output models | | 7 | | % |
| | 15 Vdc output models | | 6 | | % |
| | 24 Vdc output models | | 5 | | % |
| voltage accuracy | see tolerance envelope curves | | | | |
| switching frequency | 100% load, nominal input voltage | | 100 | | kHz |
| temperature coefficient | 100% load | | | ±0.03 | %/°C |

## PROTECTIONS

| parameter | conditions/description | min | typ | max | units |
|---|---|---|---|---|---|
| short circuit protection[1] | 3 & 24 Vdc input models; PDS1-S5-S24-S | | | 1 | s |
| | all other models: continuous, automatic recovery | | | | |

Notes: 1. The supply voltage must be discontinued at the end of the short circuit duration

## SAFETY AND COMPLIANCE

| parameter | conditions/description | min | typ | max | units |
|---|---|---|---|---|---|
| isolation voltage | input to output for 1 minute at 1 mA max. | 1,500 | | | Vdc |
| isolation resistance | input to output at 500 Vdc | 1,000 | | | MΩ |
| safety approvals[2] | certified to 60950-1: UL | | | | |
| | designed to meet 62368: EN | | | | |
| conducted/radiated emissions | CISPR32/EN55032, class B (external circuit required, see Figure 1) | | | | |
| ESD | IEC/EN61000-4-2, class B, contact ±8kV | | | | |
| MTBF | as per MIL-HDBK-217F at 25°C | 3,500,000 | | | hours |
| RoHS | 2011/65/EU | | | | |

Note: 2. See specific models noted on page 1

## ENVIRONMENTAL

| parameter | conditions/description | min | typ | max | units |
|---|---|---|---|---|---|
| operating temperature | see derating curve | -40 | | 105 | °C |
| storage temperature | | -55 | | 125 | °C |
| storage humidity | non-condensing | | | 95 | % |
| temperature rise | at full load, Ta = 25°C | | 25 | | °C |

## SOLDERABILITY

| parameter | conditions/description | min | typ | max | units |
|---|---|---|---|---|---|
| hand soldering | 1.5 mm from case for 10 seconds | | | 300 | °C |
| wave soldering | see wave soldering profile | | | 260 | °C |

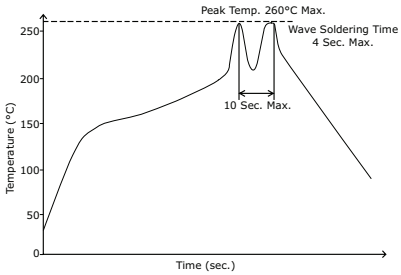


## MECHANICAL

| parameter | conditions/description | min | typ | max | units |
|---|---|---|---|---|---|
| dimensions | 11.60 x 6.00 x 10.16 (0.457 x 0.236 x 0.4 inch) | | | | mm |
| case material | plastic (UL94-V0) | | | | |
| weight | | | 1.3 | | g |

## MECHANICAL DRAWING

units: mm[inch]
tolerance: ±0.25[±0.010]
pin section tolerance: ±0.10[±0.004]

| PIN CONNECTIONS | |
|---|---|
| PIN | Function |
| 1 | GND |
| 2 | Vin |
| 3 | 0V |
| 4 | +Vo |

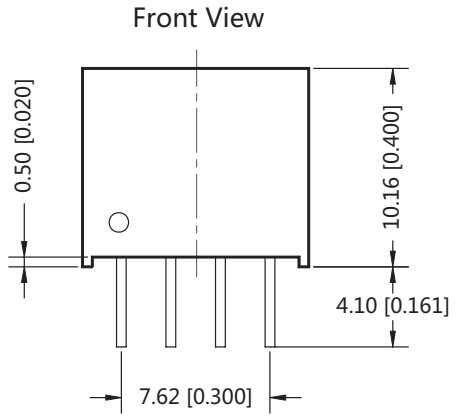


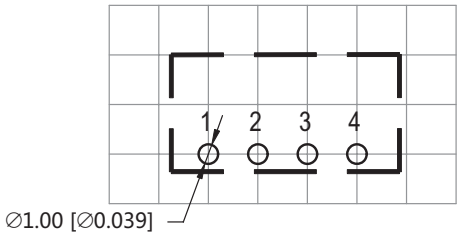


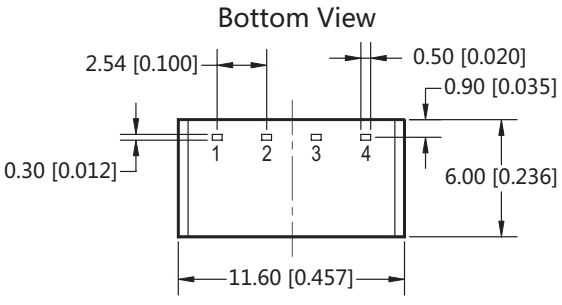


Note : Grid 2.54*2.54mm

## DERATING CURVES

***OUTPUT REGULATION CURVE***
***3.3 Vdc output model***
***(nominal input)***

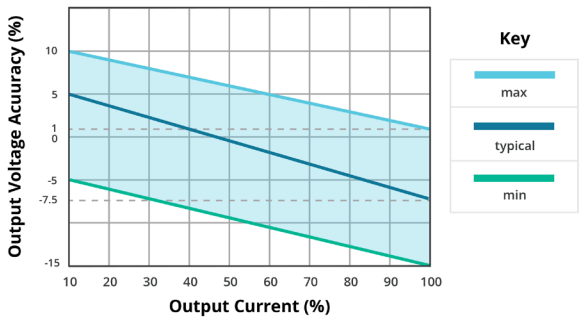


***OUTPUT REGULATION CURVE***
***all other output models***
***(nominal input)***

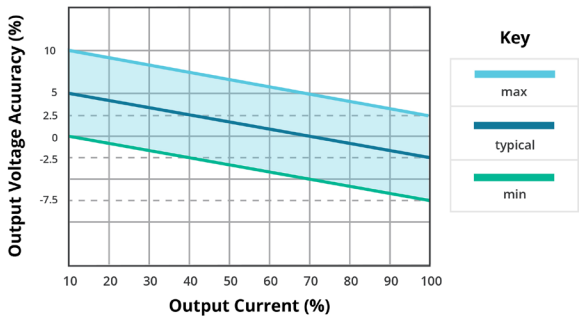


***TEMPERATURE DERATING CURVE***

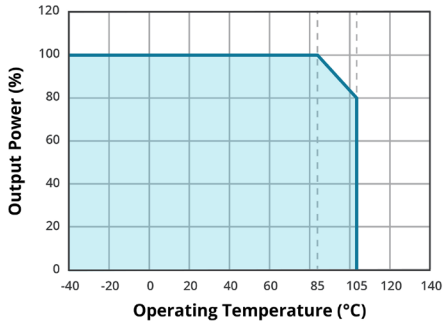


## EMC RECOMMENDED CIRCUIT

**Figure 1**

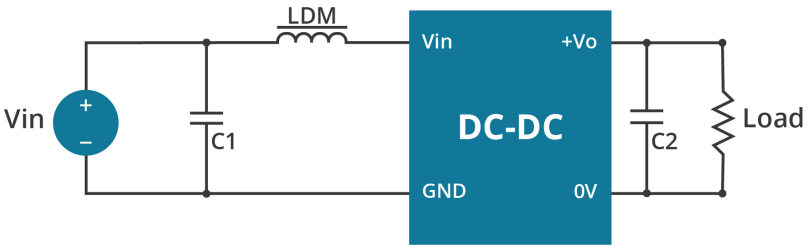


**Table 1**

| Recommended external circuit components | | | |
|---|---|---|---|
| Vin (Vdc) | C1 | C2 | LDM |
| 3.3 | 4.7µF/50V | 10µF | 6.8µH |
| 5 | 4.7µF/50V | 4.7µF | 6.8µH |
| 12 | 4.7µF/50V | 2.2µF | 6.8µH |
| 15 | 4.7µF/50V | 1µF | 6.8µH |
| 24 | 4.7µF/50V | 0.47µF | 6.8µH |

## TEST CONFIGURATION

**Figure 2**

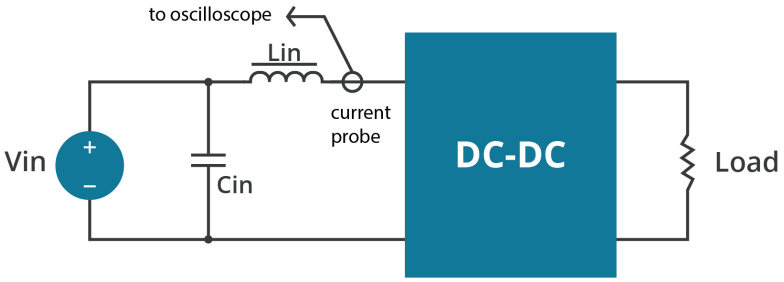


**Table 2**

| External components | |
|---|---|
| Lin | 4.7µH |
| Cin | 220µF, ESR < 1.0Ω at 100 kHz |

Note: 1. Input reflected-ripple current is measured with an inductor Lin and capacitor Cin to simulate source impedance.

## APPLICATION NOTES

1. **Output load requirement**
   To ensure this module can operate efficiently and reliably, the minimum output load may not be less than 10% of the full load during operation. If the actual output power is low, connect a resistor at the output end in parallel to increase the load.

2. **Overload Protection**
   Under normal operating conditions, the output circuit of this product has no protection against overload. The simplest method to add this is to add a circuit breaker to the circuit.

3. **Recommended circuit**
   If you want to further decrease the input/output ripple, you can increase the capacitance accordingly or choose capacitors with low ESR(see Figure 3 & Table 3). However, the capacitance of the output filter capacitor must be appropriate. If the capacitance is too high, a startup problem might arise. For every channel of the output, to ensure safe and reliable operation, the maximum capacitance must be less than the maximum capacitive load (see Table 4).

**Figure 3**

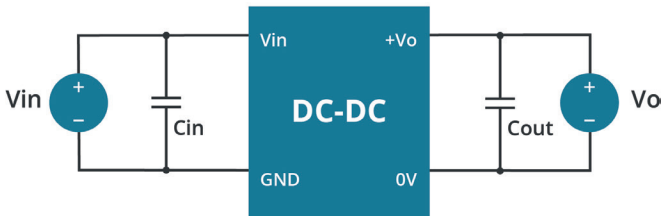


**Table 3**

| Vin (Vdc) | Cin (µF) | Vout (Vdc) | Cout (µF) |
|---|---|---|---|
| 3.3 | 4.7 | 3.3 | 10 |
| 5 | 4.7 | 5 | 10 |
| 12 | 2.2 | 9 | 4.7 |
| 15 | 2.2 | 12 | 2.2 |
| 24 | 1 | 15 | 1 |
| -- | -- | 24 | 0.47 |

**Table 4**

| Vout (Vdc) | Max. Capacitive Load (µF) |
|---|---|
| 3.3 | 220 |
| 5 | 220 |
| 12 | 220 |
| 15 | 220 |
| 24 | 220 |

Note:
1. Operation under minimum load will not damage the converter; however, they may not meet all specifications listed.
2. Max. capacitive load tested at input voltage range and full load.
3. It is recommended to use either ceramic capacitors or electrolytic capacitors on the input and the output. Using tantalum capacitors may increase the risk of failure.
4. All specifications measured at: Ta=25°C, humidity<75%, nominal input voltage and rated output load, unless otherwise specified.

## REVISION HISTORY

| rev. | description | date |
|---|---|---|
| 1.0 | initial release | 03/19/2013 |
| 1.01 | added model PDS1-S15-S12-S | 07/29/2013 |
| 1.02 | added model PDS1-S12-S3-S, updated spec | 03/07/2014 |
| 1.03 | added UL approval to some models | 10/28/2014 |
| 1.04 | updated tolerance envelope curves, corrected short circuit protection details | 10/24/2018 |
| 1.05 | safeties updated in features and safety line | 01/18/2021 |
| 1.06 | derating curves and circuit figures updated | 07/06/2021 |
| 1.07 | CE certification removed | 11/01/2022 |
| 1.08 | discontinued model PDS1-S24-S9-S | 11/11/2022 |
| 1.09 | discontinued model PDS1-S15-S12-S | 02/02/2023 |
| 1.10 | discontinued models | 06/29/2023 |
| 1.11 | discontinued models PDS1-S12-S5-S, PDS1-S24-S3-S, PDS1-S24-S5-S, PDS1-S3-S5-S, PDS1-S5-S12-S, PDS1-S5-S15-S, PDS1-S5-S24-S, PDS1-S5-S3-S & PDS1-S5-S9-S | 01/11/2024 |

The revision history provided is for informational purposes only and is believed to be accurate.

CUI INC
a bel group

**Headquarters**
20050 SW 112th Ave.
Tualatin, OR 97062
**800.275.4899**

Fax 503.612.2383
**cui**.com
techsupport@cui.com

CUI offers a two (2) year limited warranty. Complete warranty information is listed on our website.

CUI reserves the right to make changes to the product at any time without notice. Information provided by CUI is believed to be accurate and reliable. However, no responsibility is assumed by CUI for its use, nor for any infringements of patents or other rights of third parties which may result from its use.

CUI products are not authorized or warranted for use as critical components in equipment that requires an extremely high level of reliability. A critical component is any component of a life support device or system whose failure to perform can be reasonably expected to cause the failure of the life support device or system, or to affect its safety or effectiveness.