MODEL: GF0922 | DESCRIPTION: SPEAKER

FEATURES

- 92 mm round frame
- 8 Ω impedance
- rated 2.0 W
- paper cone

SPECIFICATIONS

parameter	conditions/description	min	typ	max	units
input power			2.0	3.0	W
impedance	at 800 Hz, 1.0 V	6.8	8	9.2	Ω
resonant frequency (Fo)	at 1.0 V	240	300	360	Hz
frequency response		Fo		13,000	Hz
sound pressure level	at 1.0 W, 50 cm, avg at 0.5, 0.7, 0.9, 1.0 kHz	90	93	96	dB
buzz, rattle, etc.	must be normal at sine wave, frequency range			4.0	V
dimensions	Ø92 x 29				mm
magnet	ferrite				
cone material	paper				
terminal	soldering eyelet				
operating temperature		-25		70	°C
RoHS	yes				

MECHANICAL DRAWING

units: mm
tolerance: ±0.8 mm

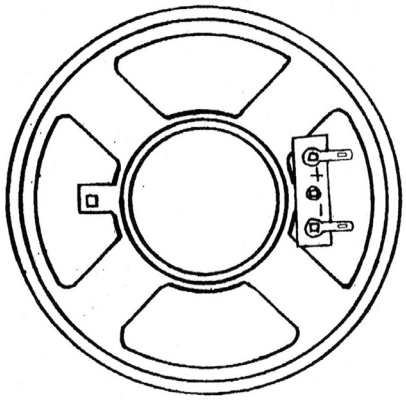

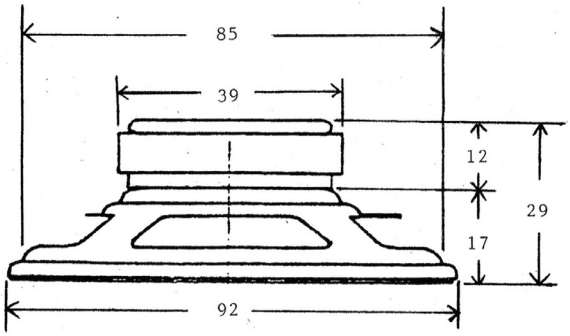

FREQUENCY RESPONSE CURVE

parameter	conditions/description
potentiometer range	50 dB
rectifier	RMS
lower limit frequency	20 Hz
zero level	70 dB

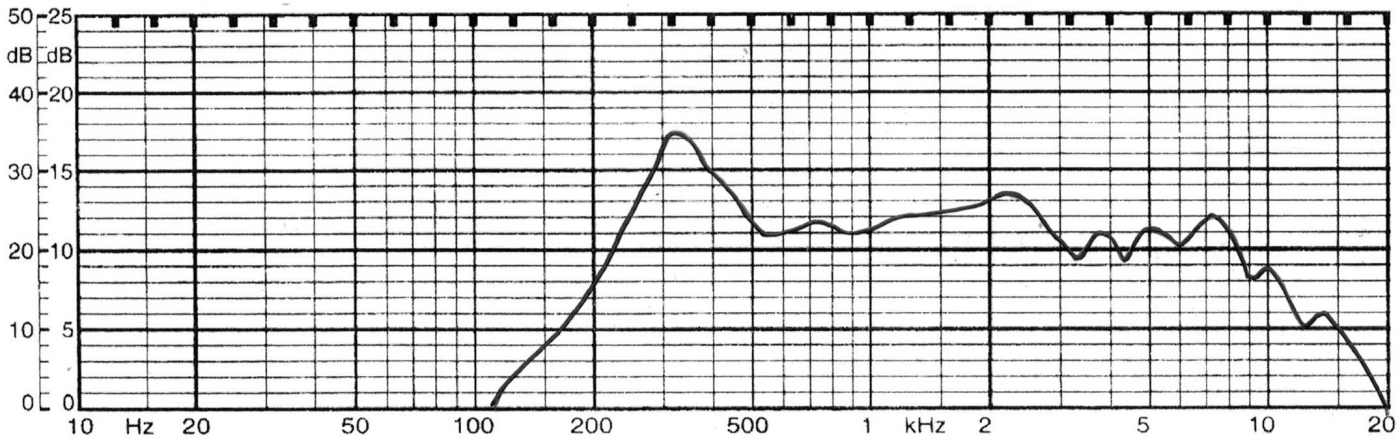

REVISION HISTORY

rev.	description	date
1.0	initial release	09/20/2006
1.01	brand update	01/26/2021
1.02	logo, datasheet style update	08/05/2022

The revision history provided is for informational purposes only and is believed to be accurate.

CUI Devices offers a one (1) year limited warranty. Complete warranty information is listed on our website.

CUI Devices reserves the right to make changes to the product at any time without notice. Information provided by CUI Devices is believed to be accurate and reliable. However, no responsibility is assumed by CUI Devices for its use, nor for any infringements of patents or other rights of third parties which may result from its use.

CUI Devices products are not authorized or warranted for use as critical components in equipment that requires an extremely high level of reliability. A critical component is any component of a life support device or system whose failure to perform can be reasonably expected to cause the failure of the life support device or system, or to affect its safety or effectiveness.