MODEL: CDS-40288 | DESCRIPTION: SPEAKER

FEATURES

- micro-speaker
- wide operating temp range
- 8 ohm impedance

SPECIFICATIONS

parameter	conditions/description	min	typ	max	units
input power	maximum power: IEC-60268-5, filter 60s on/120s off, 10 cycles at room temp		6.0	8.0	W
impedance	at 1.5 kHz, 1.0 V	6.8	8	9.2	Ω
resonant frequency (Fo)	at 1.0 V	520	650	780	Hz
frequency response	output SPL ±10 dB	Fo		10,000	Hz
sound pressure level	at 1.0 W, 0.5 m ave, at 1.0, 1.2, 1.5, 2.0 kHz	81	84	87	dB
distortion	at 1.0 kHz, 1.0 W			3	%
buzz, rattle, etc.	must be normal at sine wave between Fo ~ 20 kHz		6.9		V
polarity	cone will move forward with positive dc current to "+" terminal				
dimensions	40 x 28.5 x 17.5				mm
magnet	Nd-Fe-B				
material	ABS				
cone material	paper + cloth				
terminal	solder terminals				
weight			29		g
operating temperature		-25		70	°C
storage temperature		-40		85	°C
RoHS	yes				

Notes: 1. All specifications measured at 5~35°C, humidity at 45~85%, under 86~106kPa pressure, unless otherwise noted.

SOLDERABILITY

parameter	conditions/description	min	typ	max	units
hand soldering	for 3 ±1 seconds	360	370	380	°C

MECHANICAL DRAWING

units: mm
tolerance: ±0.5 mm

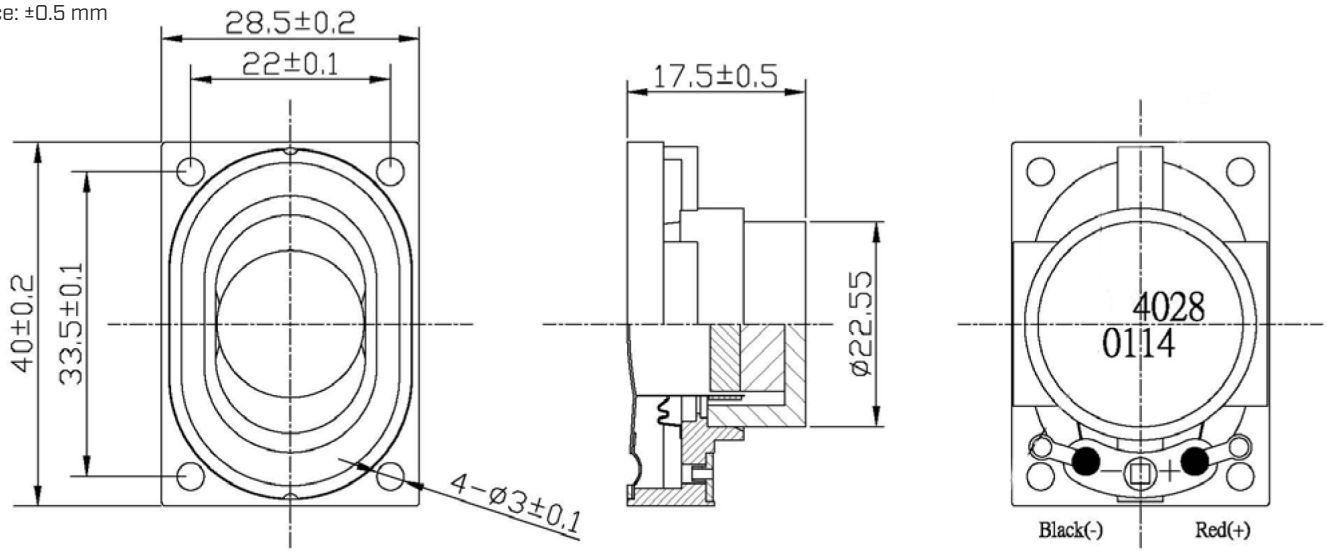

RESPONSE CURVES

Frequency Response Curve

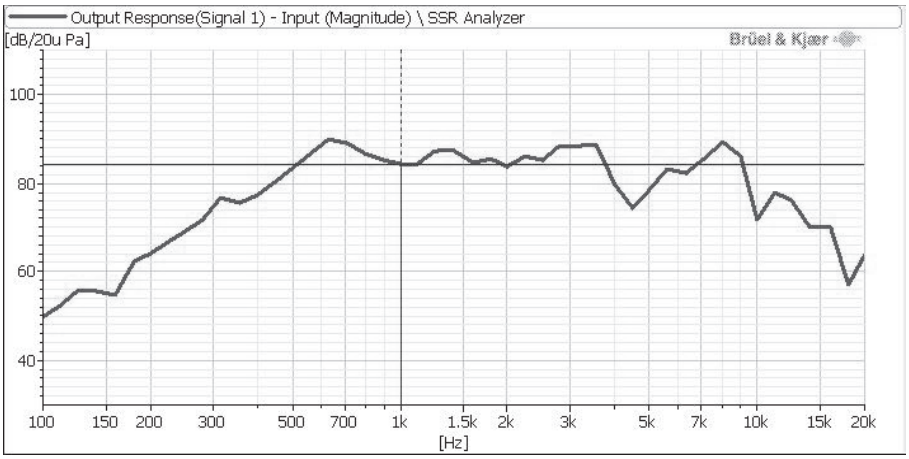

Total Harmonic Distortion Curve

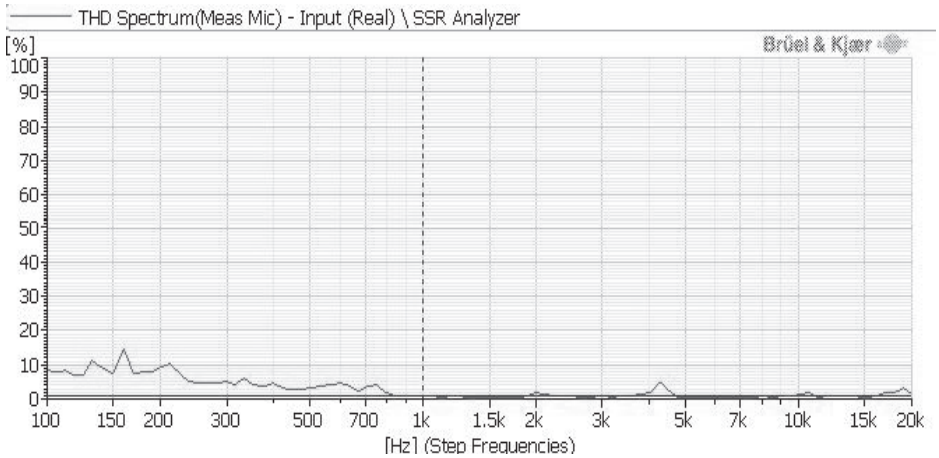

REVISION HISTORY

rev.	description	date
1.0	initial release	03/25/2015
1.01	updated datasheet	09/01/2015
1.02	updated datasheet	06/14/2019
1.03	brand update	01/23/2020
1.04	logo, datasheet style update	08/05/2022

The revision history provided is for informational purposes only and is believed to be accurate.

CUI Devices offers a one (1) year limited warranty. Complete warranty information is listed on our website.

CUI Devices reserves the right to make changes to the product at any time without notice. Information provided by CUI Devices is believed to be accurate and reliable. However, no responsibility is assumed by CUI Devices for its use, nor for any infringements of patents or other rights of third parties which may result from its use.

CUI Devices products are not authorized or warranted for use as critical components in equipment that requires an extremely high level of reliability. A critical component is any component of a life support device or system whose failure to perform can be reasonably expected to cause the failure of the life support device or system, or to affect its safety or effectiveness.