CUDEVICES



# **SERIES:** C14 | **DESCRIPTION:** PANEL MOUNT ENCODER

### FEATURES

- 2-bit quadrature output
- compact
- rugged metal design
- 1 million cycle life
- multiple termination options
- IP65 rating option
- plastic shaft options available for medical applications

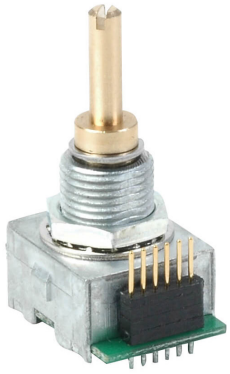

RoHS

## ELECTRICAL

| parameter | conditions/description | min | typ | max | units |
|---|---|---|---|---|---|
| power supply | 3.3Vdc input models<br>5Vdc input models | 3.168<br>4.75 | 3.3<br>5 | 3.432<br>5.25 | Vdc<br>Vdc |
| supply current | 3.3Vdc input models<br>5Vdc input models | | | 40<br>20 | mA<br>mA |
| output | open collector | | | | |
| output code | 2-bit quadrature, channel A leads channel B by 90° with clockwise rotation | | | | |
| power consumption | 3.3Vdc input models 5Vdc input models | | | 132<br>100 | mW<br>mW |
| output resolution | 4 ppr (16 cpr), 8 ppr (32 cpr) | | | | |
| angle of throw | 16 detent postion models<br>32 detent postion models | | 22.5<br>11.25 | | °<br>° |

## PUSH SWITCH SPECIFICATIONS

| parameter | conditions/description | min | typ | max | units |
|---|---|---|---|---|---|
| rating | 12 Vdc at 50 mA | | | | |
| contact resistance | | | | 200 | mΩ |
| isolation voltage | for 1 minute | | 250 | | Vac |
| insulation resistance | | 100 | | | MΩ |
| operating push force | | 3.5 | 4.5 | 5.5 | N |
| travel | | 0.2 | 0.5 | 0.8 | mm |
| bounce | | | | 10 | ms |
| push switch life | | | 1,000,000 | | cycles |

## ENVIRONMENTAL

| parameter | conditions/description | min | typ | max | units |
|---|---|---|---|---|---|
| operating temperature | | -10 | | 70 | °C |
| storage temperature | | -20 | | 80 | °C |
| vibration | 10~55Hz with a peak to peak amplitude of 1.5mm | | | | |
| shock | half sine wave for 11ms | | 50 | | G |
| cold test | at -20°C for 96 hours | | | | |
| heat test | at +80°C for 96 hours | | | | |

## ENVIRONMENTAL (CONTINUED)

| parameter | conditions/description | min | typ | max | units |
|---|---|---|---|---|---|
| temperature change test | at -10~70°C for 30 minutes each | | | | |
| humidity test | at 40°C, 90~95% humidity for 96 hours | | | | |
| RoHS | yes | | | | |

## MECHANICAL

| parameter | conditions/description | min | typ | max | units |
|---|---|---|---|---|---|
| shaft load | radial<br>axial | | | 10<br>15 | N<br>N |
| operational torque | without detent<br>with detent | <br>0.2 | <br>0.4 | 0.2<br>0.6 | N·cm<br>N·cm |
| mounting torque | | | 100 | | N·cm |
| rotational life | | | 1,000,000 | | cycles |
| weight | | | 11 | | g |

## OUTPUT WAVEFORMS

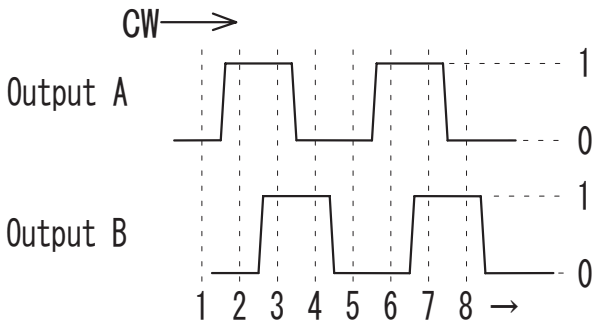


| Output \ Position | 1 | 2 | 3 | 4 | 5 |
|---|---|---|---|---|---|
| A | 0 | 1 | 1 | 0 | 0 |
| B | 0 | 0 | 1 | 1 | 0 |

(1) 3.3V : "0" : 0.8V max. "1" : 2.3V min.

(2) 5V : "0" : 1.0V max. "1" : 3.0V min.

*The code repeats from 1 to 4.

## PART NUMBER KEY

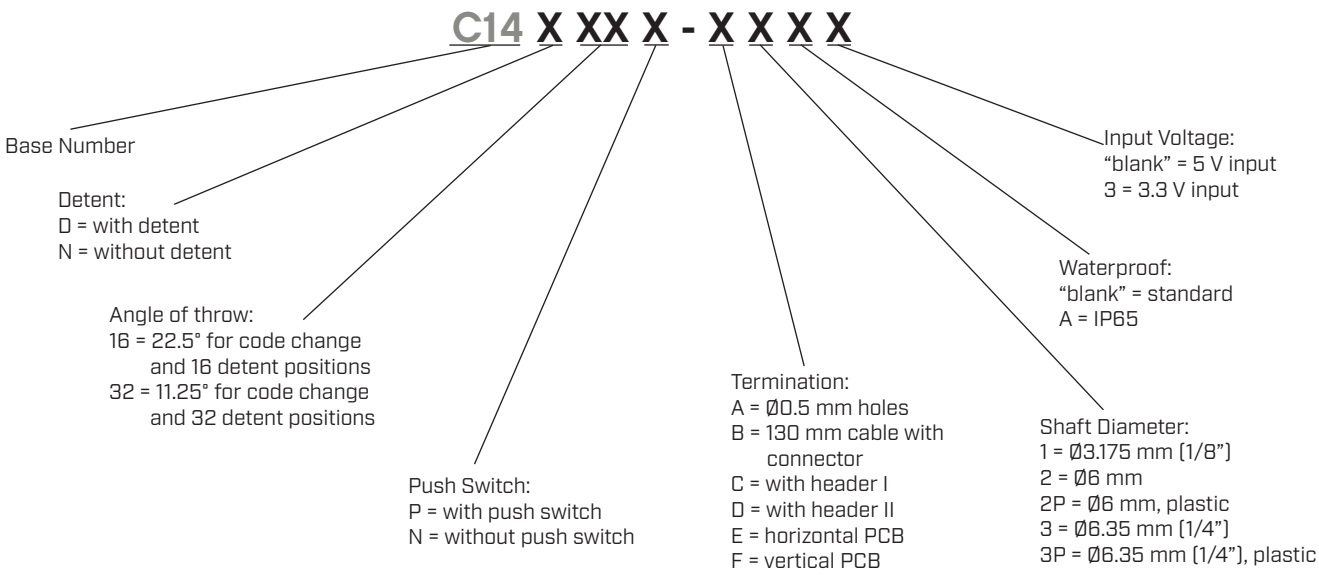

## OUTPUT CIRCUIT

**5V Input**

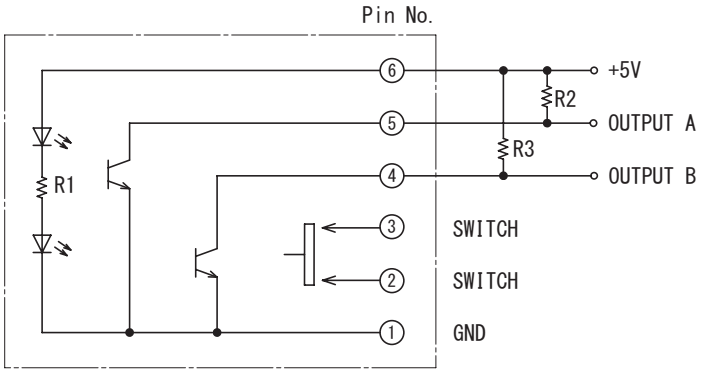


＊R2,R3:External pull-up resistors 5.1KΩ

**3.3V Input**

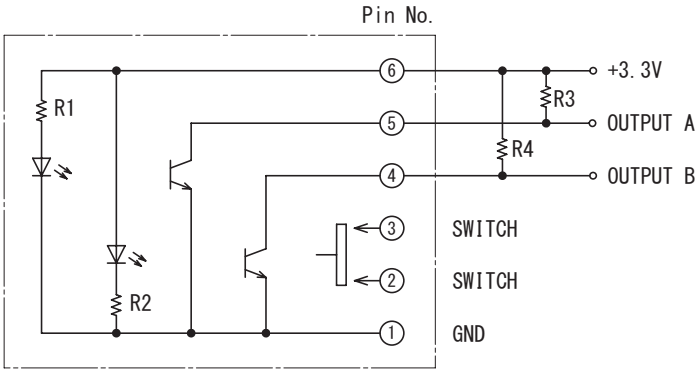


＊R3,R4:External pull-up resistors 5.1KΩ

## MECHANICAL DRAWING

### 5V INPUT, WITH PUSH SWITCH

units: mm

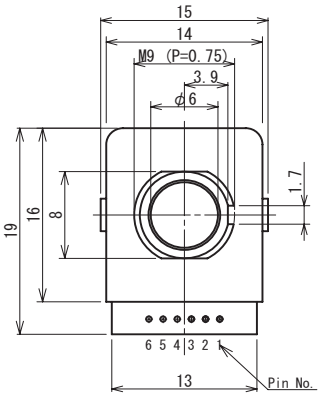


**Ø6.0mm Shaft**

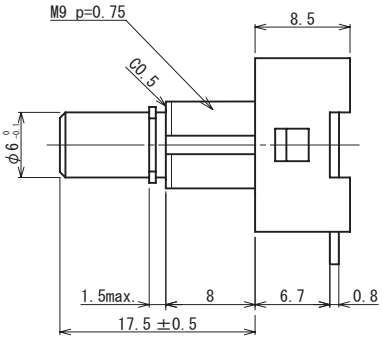


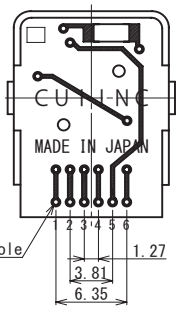


**Mounting Hole Dimensions**

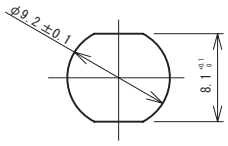


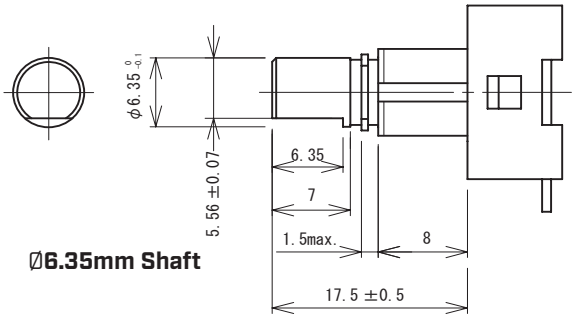


**Ø6.35mm Shaft**

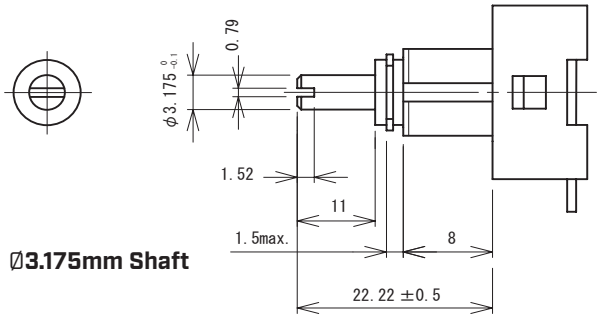


**Ø3.175mm Shaft**

# MECHANICAL DRAWING (CONTINUED)

## 5V INPUT, WITHOUT PUSH SWITCH

units: mm

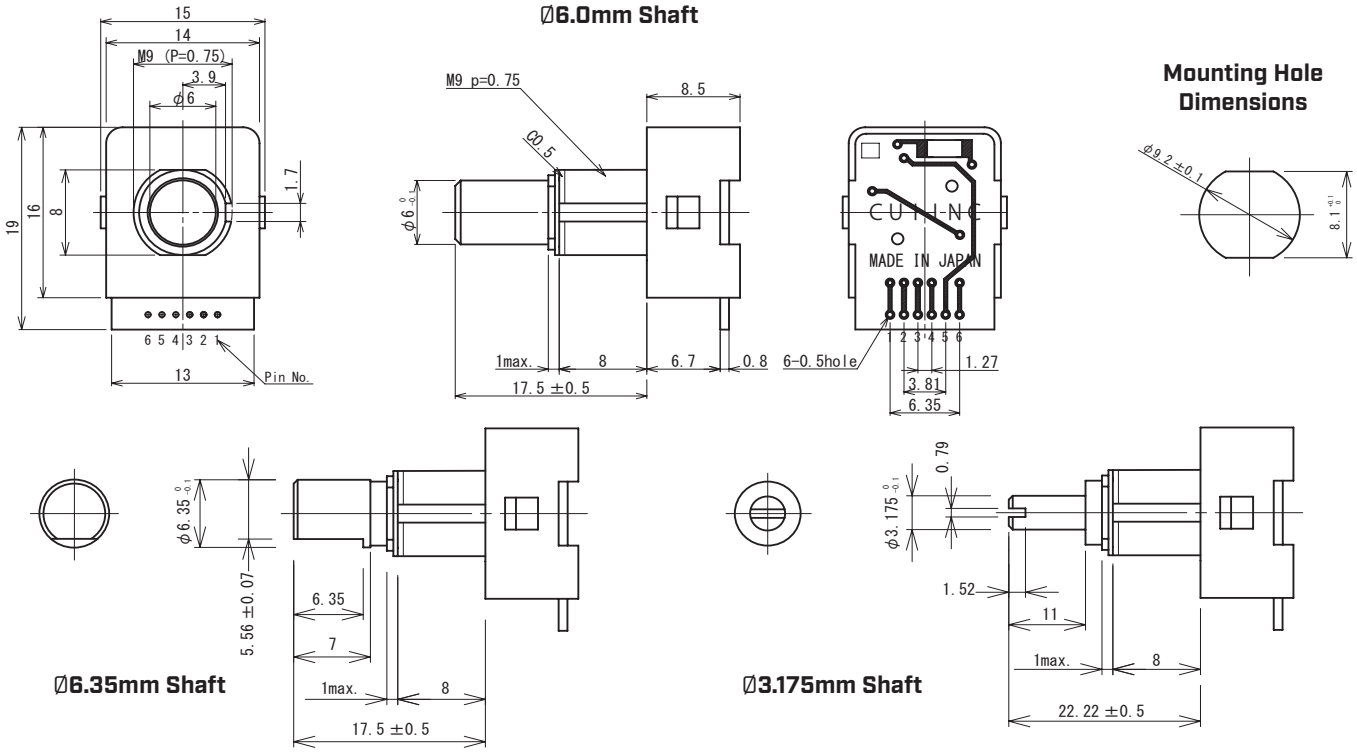


## 3.3V INPUT, WITH PUSH SWITCH

units: mm

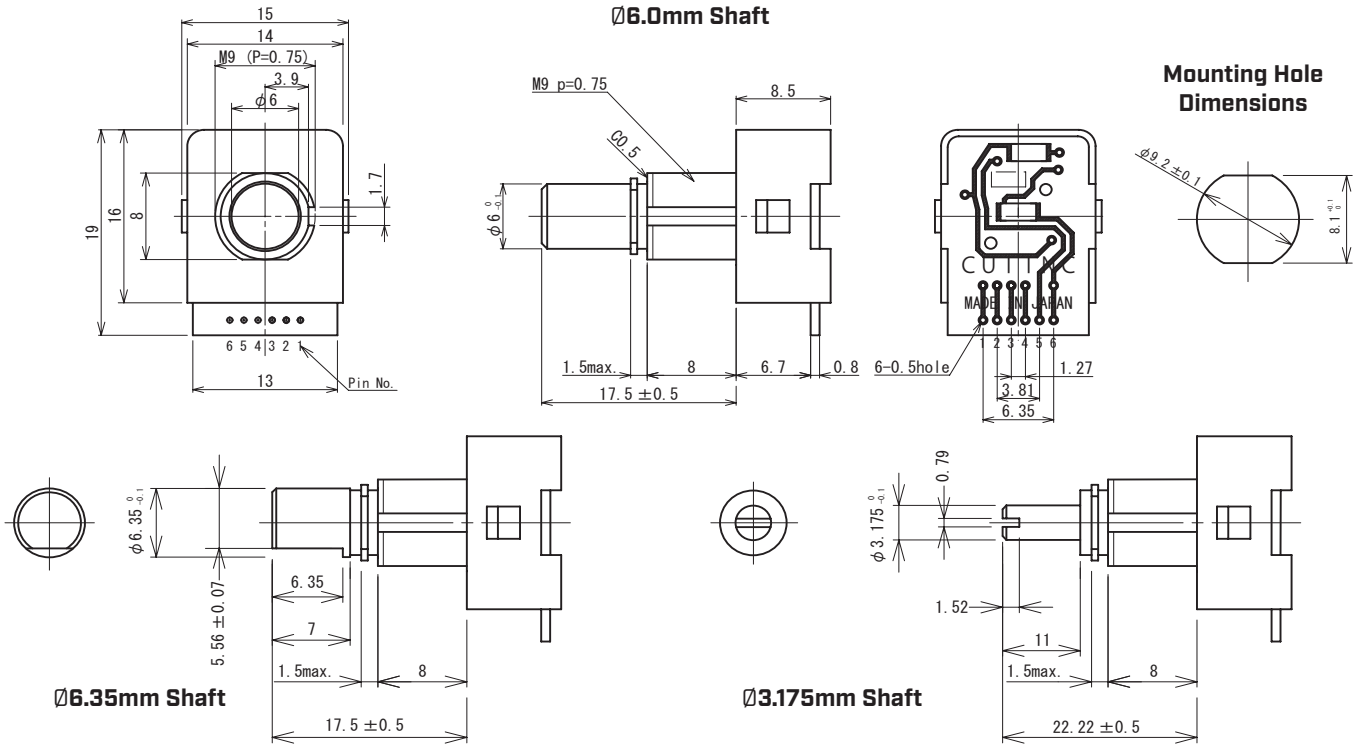

## MECHANICAL DRAWING (CONTINUED)

### 3.3V INPUT, WITHOUT PUSH SWITCH

units: mm

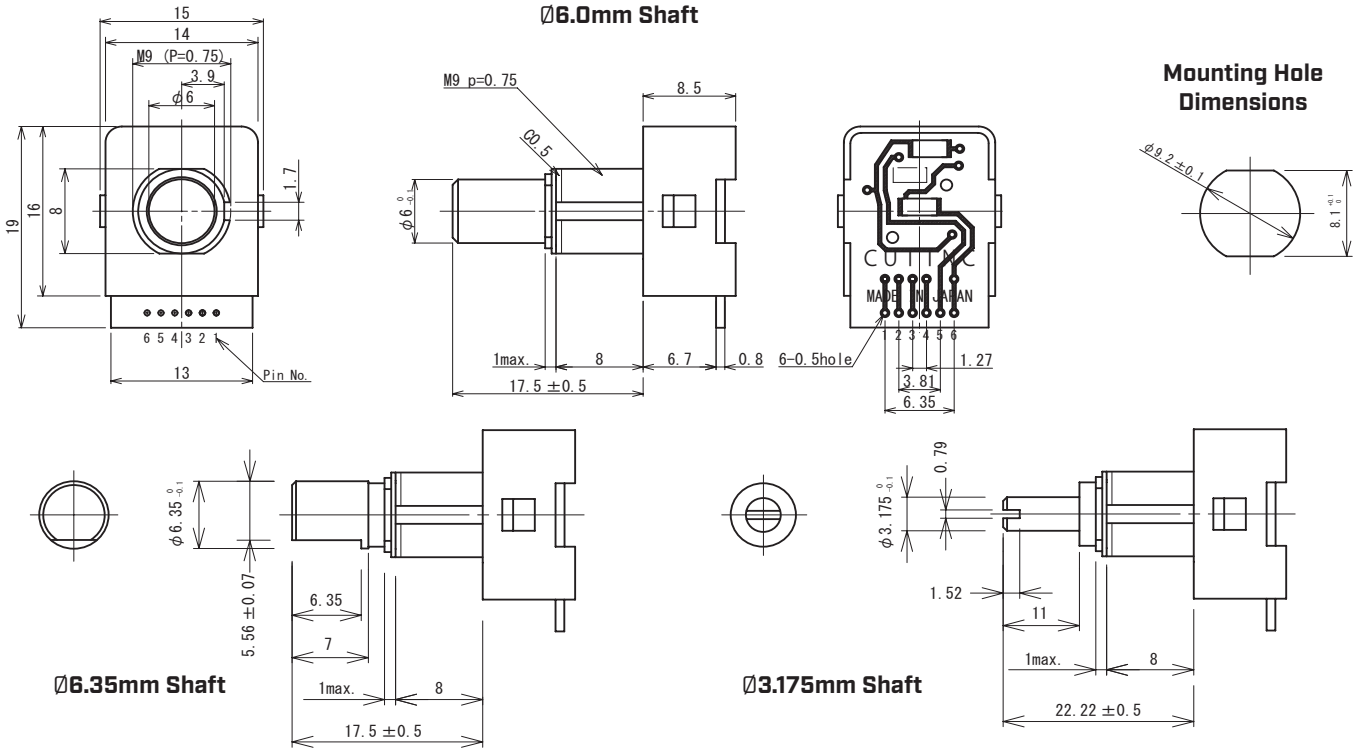


## MECHANICAL DRAWING, TERMINATION OPTIONS

units: mm

### OPTION A: Ø0.5MM HOLES

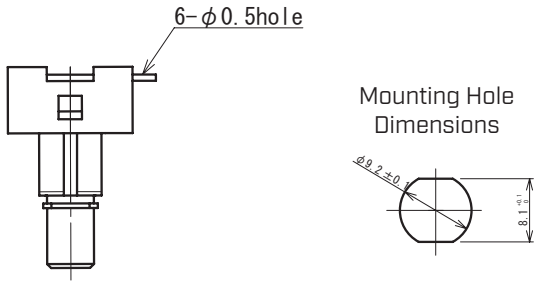


### OPTION B: 130MM CABLE WITH CONNECTOR

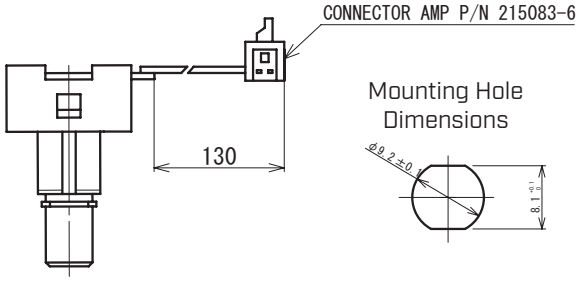


### OPTION C: HEADER I

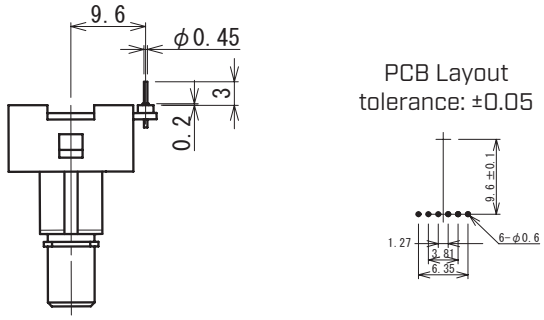


### OPTION D: HEADER II

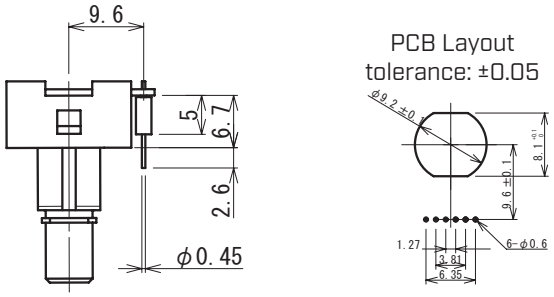

## MECHANICAL DRAWING, TERMINATION OPTIONS (CONTINUED)

units: mm

### OPTION E: HORIZONTAL PCB

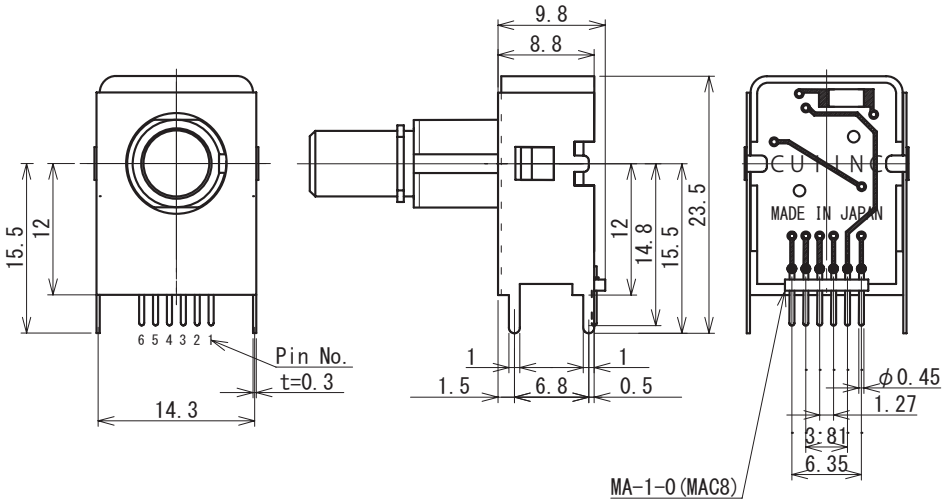


PCB Layout
tolerance: ±0.05

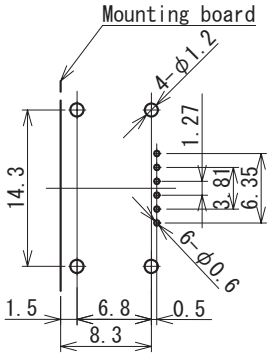


### OPTION F: VERTICAL PCB

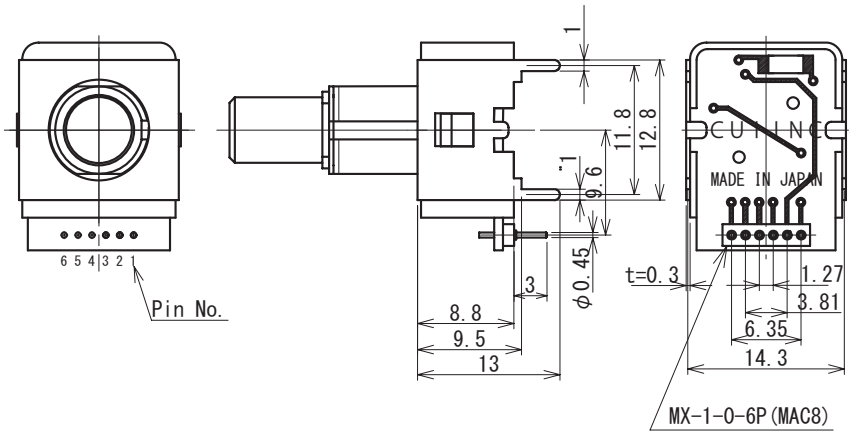


PCB Layout
tolerance: ±0.05

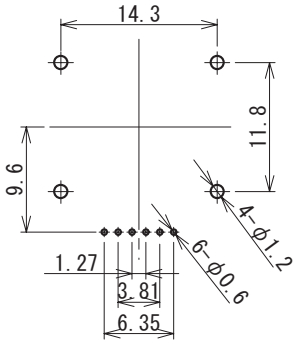


## WATERPROOF MOUNTING

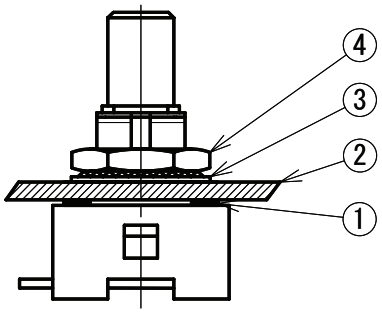


| No. | Qty. | Component |
|---|---|---|
| 1 | 1 | waterproof washer |
| 2 | 1 | panel |
| 3 | 1 | toothed lock washer |
| 4 | 1 | nut |

Note: 1. Protects against ingress of water (IP65) from front side of panel only.

## REVISION HISTORY

| rev. | description | date |
|---|---|---|
| 1.0 | initial release | 02/25/2009 |
| 1.01 | applied new spec template, updated operating temperature, updated 3.3V PCB | 05/20/2014 |
| 1.02 | brand update | 10/04/2019 |
| 1.03 | added plastic shaft models | 10/14/2020 |
| 1.04 | logo, datasheet style update | 08/05/2022 |

The revision history provided is for informational purposes only and is believed to be accurate.

CUI Devices offers a one (1) year limited warranty. Complete warranty information is listed on our website.

CUI Devices reserves the right to make changes to the product at any time without notice. Information provided by CUI Devices is believed to be accurate and reliable. However, no responsibility is assumed by CUI Devices for its use, nor for any infringements of patents or other rights of third parties which may result from its use.

CUI Devices products are not authorized or warranted for use as critical components in equipment that requires an extremely high level of reliability. A critical component is any component of a life support device or system whose failure to perform can be reasonably expected to cause the failure of the life support device or system, or to affect its safety or effectiveness.