V-INFINITY
a division of CUI INC

SERIES: 60 W DESKTOP **DESCRIPTION: SWITCHING POWER SUPPLY**

FEATURES

- universal AC input
- regulated output voltage
- short circuit, over load protection
- meets EISA / efficiency level IV regulations
- custom designs available

RoHS

Discontinued

MODEL

MODEL	output voltage	output current		output wattage	ripple	efficiency level	cord length
	nominal (V dc)	min (A)	max (A)	max (W)	max. (mVp-p)		(mm)
ETS120500U	12	0	5	60	240	IV	1830 +150/-0
ETS150400U	15	0	4	60	240	IV	1830 +150/-0
ETS190315U	19	0	3.15	60	240	V	1830 +150/-0
ETS240250U	24	0	2.5	60	240	V	1830 +150/-0

*at full load, 100 ~ 240 V ac input, measured at 20MHz bandwidth with a 10 uF electrolytic cap and a 0.1 uF ceramic cap on the output

PART NUMBER KEY

ETS120500U T C - PXXXX - SZ - CXX

- Base Number (example of 12 V dc, 5 A)
- AC Input Plug: blank = IEC 320 C14 plug; T = IEC 320 C6 plug
- Input Cable: C = included; blank = no cable
- DC Plug type: see output plug options on page 5
- Factory Designation
- Reserved for custom configurations

SERIES: 60 W DESKTOP **DESCRIPTION: SWITCHING POWER SUPPLY**

INPUT

parameter	conditions/description	min	nom	max	units
rated input voltage		100		240	V ac
input voltage range		90		264	V ac
rated frequency		50		60	Hz
frequency range		47		63	Hz
rated input current				1.5	A
inrush current	115 V ac, full load, cold start, 25˚C 230 V ac, full load, cold start, 25˚C			50 100	A A
no load power consumption	100 ~ 240 V ac input			0.5	W

OUTPUT

parameter	conditions/description	min	nom	max	units
line regulation			±1		%
load regulation			±5		%
over voltage protection	output shut down	140%		160%	V dc
short circuit protection	output shut down and auto-restart				

SAFETY & EMI

parameter	conditions/description	min	nom	max	units
HI-POT	input to output at 10 mA for 1 second			1500	V ac
insulation resistance	input to output at 500 V dc	100			MΩ
safety approvals	UL/cUL, CB (IEC60950-1), CE (GS/TUV EN60950-1), RCM				
EMI standard	FCC part 15 class B, CE (EN55022, EN55024)				
leakage current				3.5	mA
RoHS compliant	yes				
LPS power supply	yes				

Discontinued

ENVIRONMENTAL

parameter	conditions/description	min	nom	max	units
operating temperature		0		40	˚C
operating humidity		20		80	%
storage temperature		-10		70	˚C
storage humidity		10		90	%

V-INFINITY
a division of CUI INC

SERIES: 60 W DESKTOP **DESCRIPTION:** SWITCHING POWER SUPPLY

MECHANICAL DRAWING

case size	116 L x 50 W x 31 H mm tolerance: ±1 mm

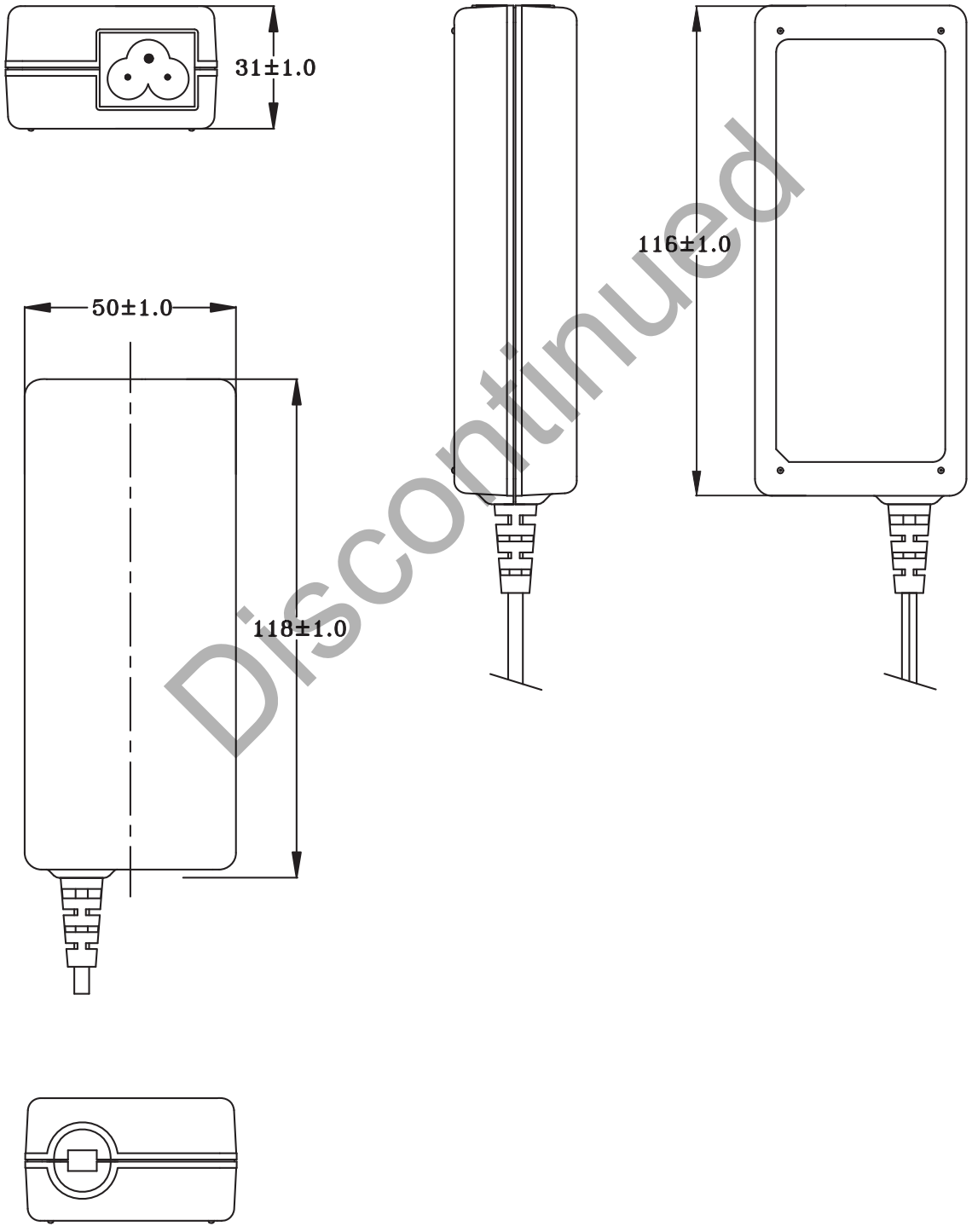

Discontinued

SERIES: 60 W DESKTOP **DESCRIPTION: SWITCHING POWER SUPPLY**

DC CORD

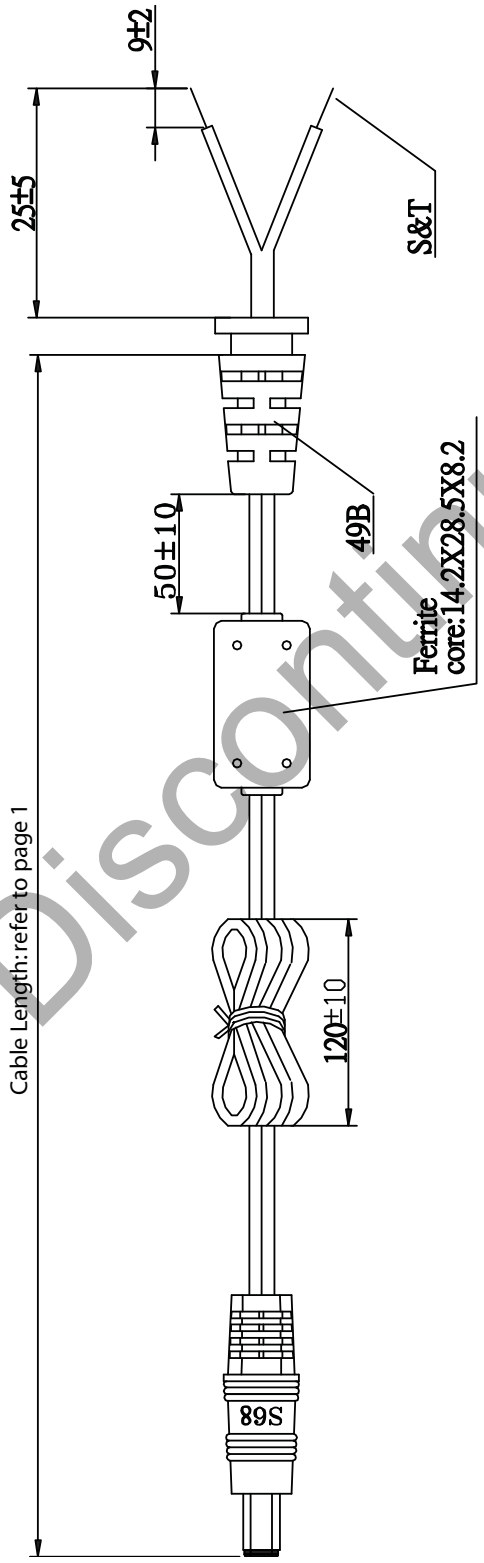

Cable Gauge	
ETS120500	18 AWG
ETS150400	18 AWG
ETS190315	18 AWG
ETS240250	18 AWG

Discontinued

SERIES: 60 W DESKTOP **DESCRIPTION: SWITCHING POWER SUPPLY**

OUTPUT PLUG OPTIONS

3.5 mm Phono Plug

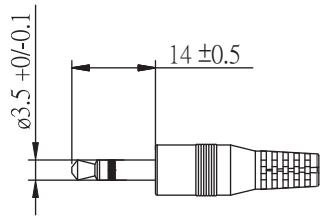

P1

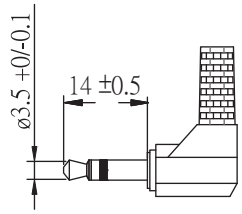

P1R

*Tip positive

Standard DC Plug

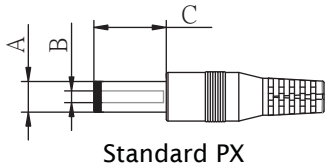

Standard PX

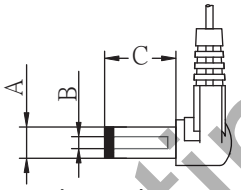

Right Angle PXR

	A	B	C	Unit
P5/P5R	5.5	2.1	12	mm
P6/P6R	5.5	2.5	12	mm
P7/P7R	3.5	1.3	9.5	mm
P8/P8R	3.8	1.35	9.5	mm
P9/P9R	3.8	1.05	9.5	mm

Locking DC Plug

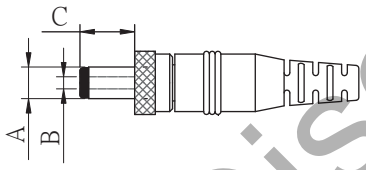

	A	B	C	Unit
P10	5.5	2.1	9.5	mm
P11	5.5	2.5	9.5	mm

EIAJ Plugs

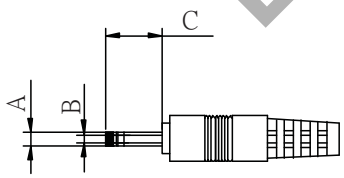

Standard PXX

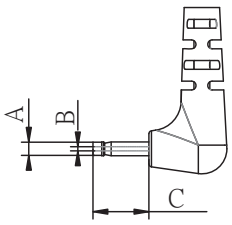

Right Angle PXXR

	EIAJ	A	B	C	D	Unit
P12/P12R	EIAJ-1	2.35	0.7	9.5	NA	mm
P13/P13R	EIAJ-2	4.0	1.7	9.5	5.0	mm
P14/P14R	EIAJ-3	4.75	1.7	9.5	5.0	mm

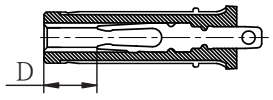

PART NUMBER GUIDE

PXX X X

Plug type

Plug angle:
"blank" = standard
R = right angle

Plug polarity:
"blank" = N/A
P = center positive

N = center negative

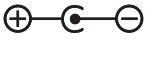

***Contact CUI for additional output plug options.**

Discontinued

SERIES: 60 W DESKTOP **DESCRIPTION: SWITCHING POWER SUPPLY**

AC CORD

C6 C14

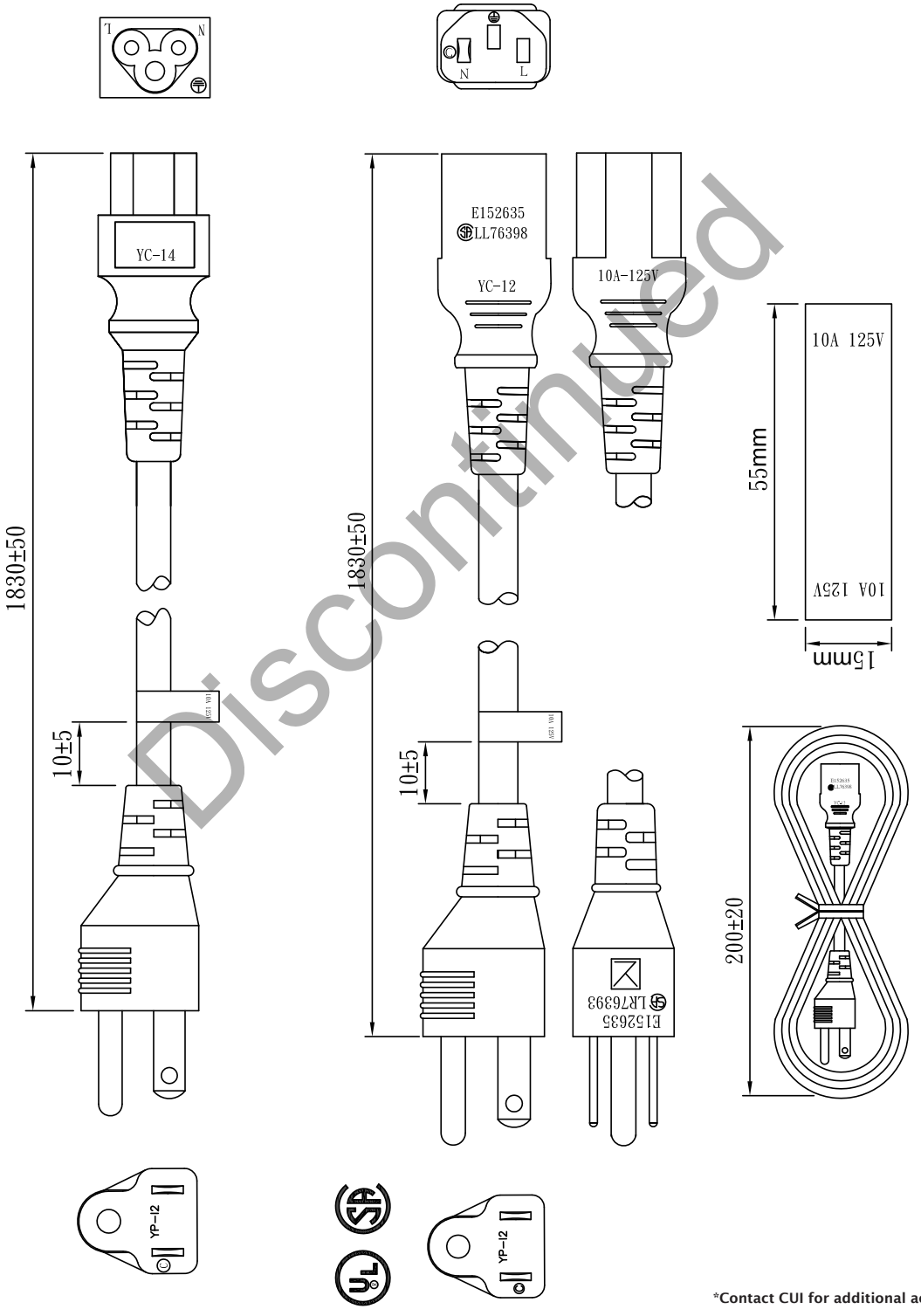

Discontinued

*Contact CUI for additional ac cord input blade options.

SERIES: 60 W DESKTOP **DESCRIPTION:** SWITCHING POWER SUPPLY

INDIVIDUAL PACKAGING

tolerance	± 1 mm

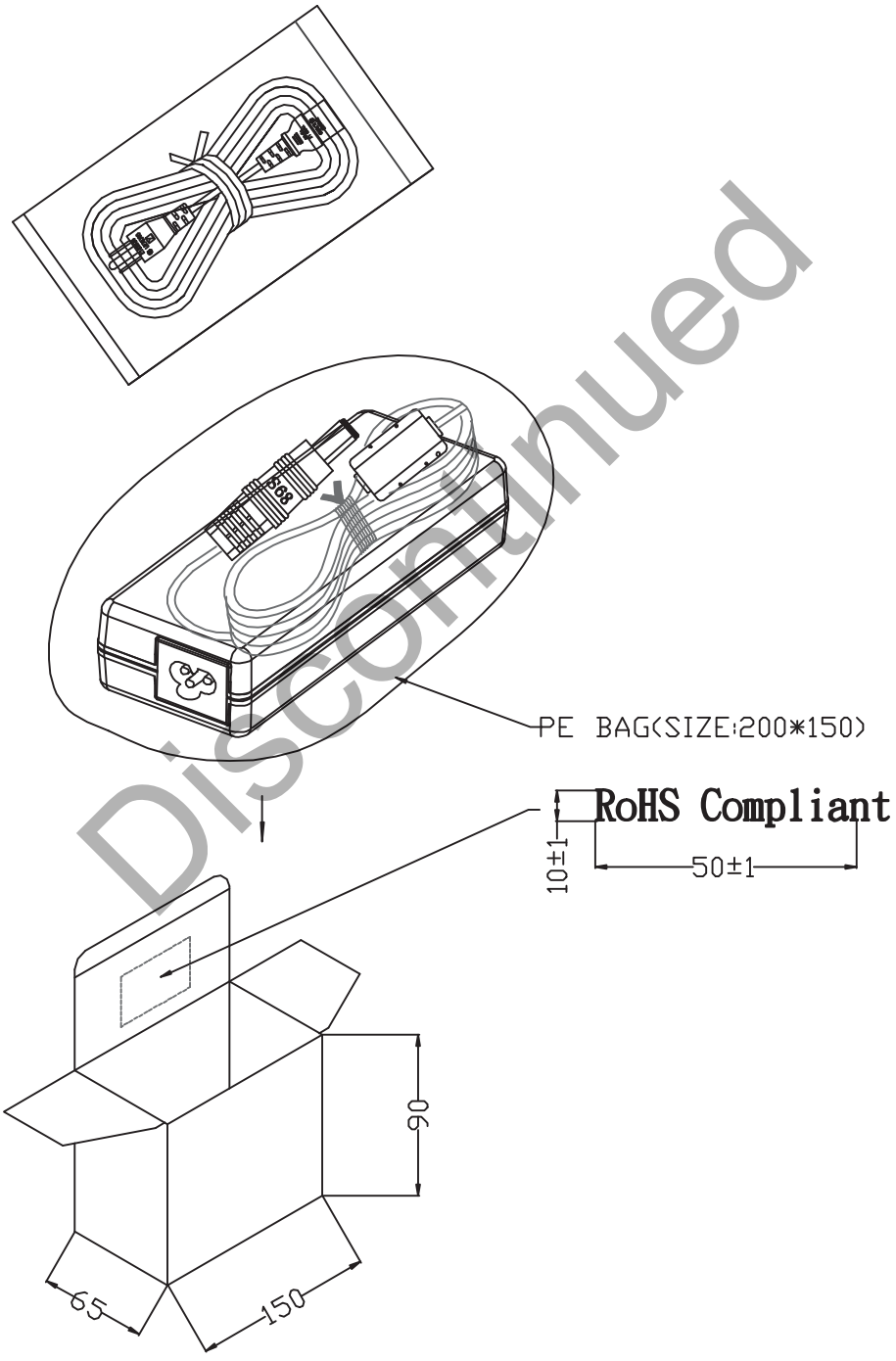

Discontinued

V-INFINITY
a division of CUI INC

SERIES: 60 W DESKTOP **DESCRIPTION: SWITCHING POWER SUPPLY**

PACKAGING

tolerance	+7 / -0 mm

CARTON SIZE: 480X477X167mm
Q'TY: 30pcs(15x2x1)
"RoHS Compliant"

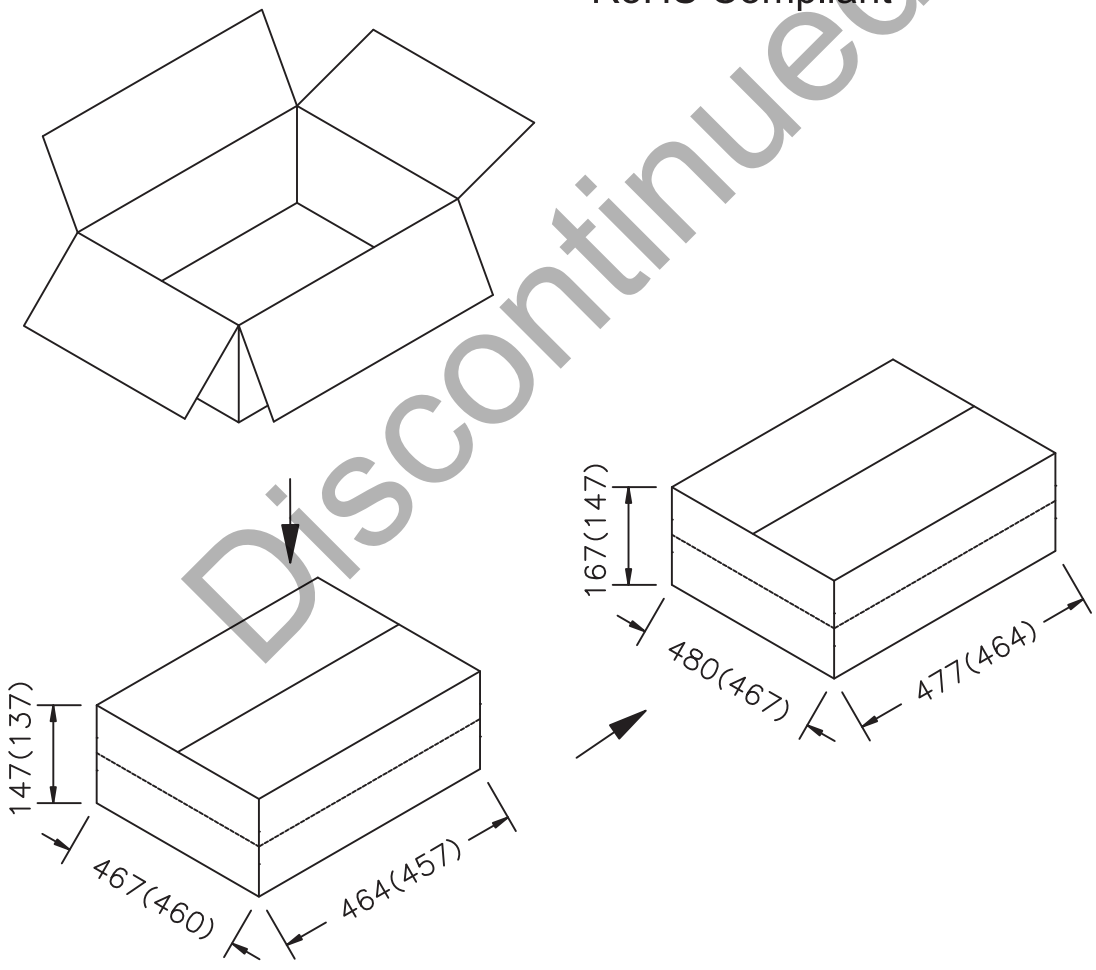

Discontinued