CUI INC
a bel group

SERIES: VSBU-120-T | **DESCRIPTION:** AC-DC POWER SUPPLY

FEATURES

- up to 120 W continuous power
- industry standard 3" x 5" footprint
- universal input 90~260 Vac
- triple output
- active power correction
- internal EMI filter
- no minimum load required
- input surge current, over voltage, over load, and over current protections
- efficiency 80%

RoHS c UL us

MODEL

MODEL		output voltage (Vdc)	output current max (A)	output power max (W)	ripple and noise max (mVp-p)	efficiency typ (%)
VSBU-120-T312A	Vo1	3.3	15	120	66	80
	Vo2	12	6	120	120	80
	Vo3	12	0.8	120	120	80
VSBU-120-T312A	Vo1	3.3	15	120	66	80
	Vo2	12	6	120	120	80
	Vo3	12	0.8	120	120	80
VSBU-120-T125A	Vo1	5	15	120	50	80
	Vo2	12	6	120	120	80
	Vo3	-5	0.8	120	-50	80
VSBU-120-T125B	Vo1	5	15	120	50	80
	Vo2	12	6	120	150	80
	Vo3	5	0.8	120	50	80
VSBU-120-T512A	Vo1	5	15	120	50	80
	Vo2	12	6	120	120	80
	Vo3	-12	0.8	120	-120	80
VSBU-120-T512B	Vo1	5	15	120	50	80
	Vo2	12	6	120	120	80
	Vo3	12	0.8	120	120	80
VSBU-120-T515A	Vo1	5	15	120	50	80
	Vo2	15	6	120	150	80
	Vo3	-15	0.8	120	-150	80
VSBU-120-T515B	Vo1	5	15	120	50	80
	Vo2	15	6	120	150	80
	Vo3	15	0.8	120	150	80
VSBU-120-T524A	Vo1	5	15	120	50	80
	Vo2	24	3.5	120	240	80
	Vo3	-24	0.8	120	-240	80
VSBU-120-T524B	Vo1	5	15	120	50	80
	Vo2	24	3.5	120	240	80
	Vo3	24	0.8	120	240	80

continued on page 2

MODEL

MODEL		output voltage (Vdc)	output current max (A)	output power max (W)	ripple and noise max (mVp-p)	efficiency typ (%)
VSBU-120-T305A	Vo1	5	15	120	50	80
	Vo2	24	3.5	120	240	80
	Vo3	-12	0.8	120	-120	80
VSBU-120-T305B	Vo1	5	15	120	50	80
	Vo2	24	3.5	120	240	80
	Vo3	12	0.8	120	120	80
VSBU-120-T3125A	Vo1	3.3	15	120	66	80
	Vo2	12	6	120	120	80
	Vo3	-5	0.8	120	-50	80
VSBU-120-T3125B	Vo1	3.3	15	120	66	80
	Vo2	12	6	120	120	80
	Vo3	5	0.8	120	50	80
VSBU-120-T510A	Vo1	5	15	120	50	80
	Vo2	10	6	120	100	80
	Vo3	-10	1	120	-100	80
VSBU-120-T510B	Vo1	5	15	120	50	80
	Vo2	10	6	120	100	80
	Vo3	10	1	120	100	80
VSBU-120-T3512A	Vo1	3.3	15	91.5	66	80
	Vo2	5	6	91.5	50	80
	Vo3	-12	1	91.5	-120	80
VSBU-120-T3512B	Vo1	3.3	15	91.5	66	80
	Vo2	5	6	91.5	50	80
	Vo3	12	1	91.5	120	80

PART NUMBER KEY

VSBU-120- TXXXXX - X

- VSBU-120- : Base Number
- TXXXXX : Output Voltage
- X : Power Fail Detect
  - "Blank" = No
  - P = Yes

INPUT

parameter	conditions/description	min	typ	max	units
voltage		90		260	Vac
frequency		47		63	Hz
current	at 115 Vac, full load at 230 Vac, full load			1.7 1.0	A A
inrush current	at 115 Vac, 25°C, full load, cold start at 230 Vac, 25°C, full load, cold start		30 65	37 75	A A
power factor correction	full load at 90 ~ 260 Vac	0.95	0.97	1.0	

OUTPUT

parameter	conditions/description	min	typ	max	units
line regulation	full load		0.5	1	%
load regulation	at 230 Vac		3	5	%
temperature coefficient	all output	-0.04		0.04	%/°C
transient response	full load to half load at 100 Vac			4	ms
start-up	full load at 100 Vac	0.3	1	2	s
hold-up	full load at 110 Vac	16			ms

PROTECTIONS

parameter	conditions/description	min	typ	max	units
over voltage protection		112		132	%
over current protection		110		150	%

SAFETY & COMPLIANCE

parameter	conditions/description	min	typ	max	units
isolation voltage	primary to secondary primary to earth ground	4,242 2,121			Vdc Vdc
isolation resistance	test voltage of 500 Vdc	50			MΩ
safety approvals	UL 60950-1 2nd edition, EN 60950-1 2nd edition				
EMI/EMC	CISPR 22 class B, FCC part-15 class B				
leakage current	full load at 240 Vac		0.4	0.75	mA
RoHS compliant	yes				
MTBF	MIL-HDSK-217F, 25°C ambient	100,000			hrs

ENVIRONMENTAL

parameter	conditions/description	min	typ	max	units
operating temperature		0		70	°C
storage temperature		-40		85	°C
operating humidity	non-condensing	5		95	%
storage humidity		0		75	%

DERATING CURVES

output power vs. ambient temperature

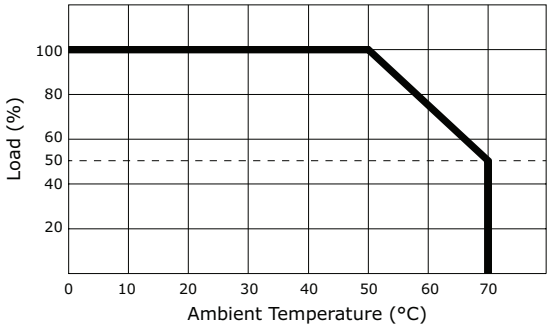

MECHANICAL DRAWING

units: mm[inches]
tolerance: ±0.5mm

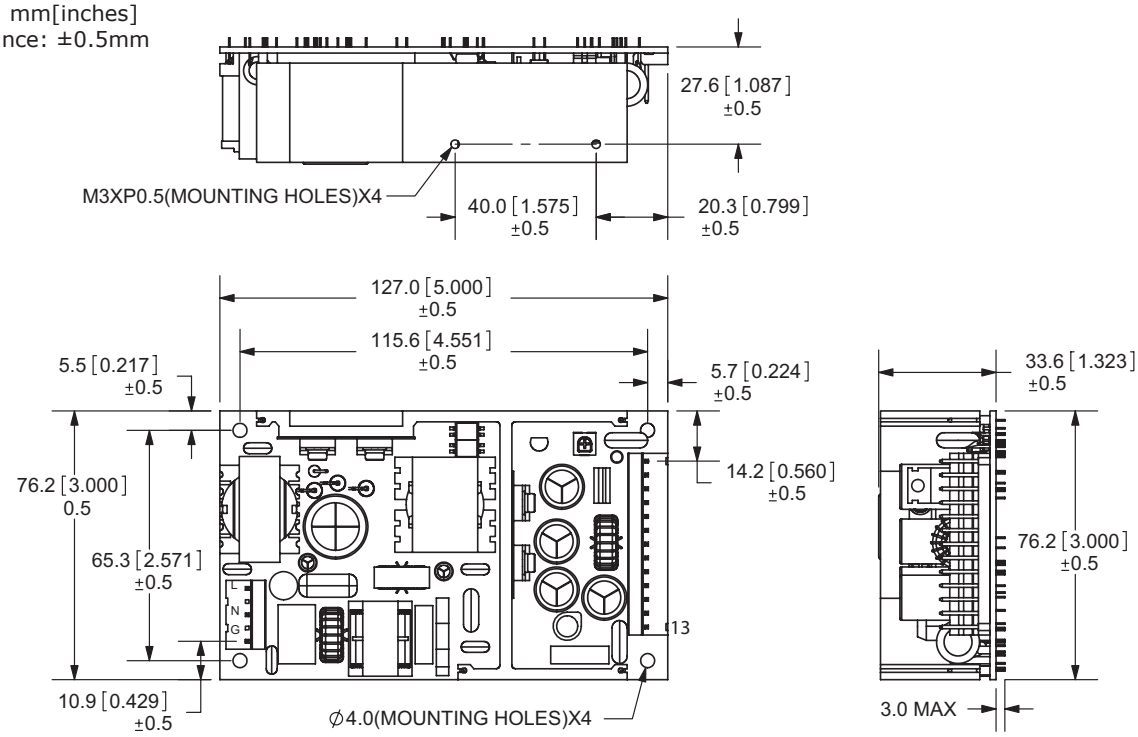

CN1	
1	ac line
2	ac neutral
3	ground

CN2	
1	V2
2	V2
3	V1
4	V1
5	V1
6	V1
7	com
8	com
9	com
10	V3
11	com
12	com
13	n/c

*pin 13 for optional power fail detect

note:
1. Input connector mates with Molex housing 09-50-3051 and Molex 2478 series crimp terminal.
2. Output connector mates with Molex housing 09-50-3131 and Molex 2478 series crimp terminal.

REVISION HISTORY

rev.	description	date
1.0	initial release	11/19/2010
1.01	applied new spec template	02/29/2012
1.02	V-Infinity branding removed	08/14/2012
1.03	updated derating curve	02/07/2013
1.04	updated output connector part number	09/24/2020
1.05	updated safety marks and features	04/27/2021

The revision history provided is for informational purposes only and is believed to be accurate.

CUI INC
a bel group

Headquarters
20050 SW 112th Ave.
Tualatin, OR 97062
800.275.4899

Fax 503.612.2383
cui.com
techsupport@cui.com

CUI offers a two (2) year limited warranty. Complete warranty information is listed on our website.

CUI reserves the right to make changes to the product at any time without notice. Information provided by CUI is believed to be accurate and reliable. However, no responsibility is assumed by CUI for its use, nor for any infringements of patents or other rights of third parties which may result from its use.

CUI products are not authorized or warranted for use as critical components in equipment that requires an extremely high level of reliability. A critical component is any component of a life support device or system whose failure to perform can be reasonably expected to cause the failure of the life support device or system, or to affect its safety or effectiveness.