CUI INC
a bel group

SERIES: VOF-70 | DESCRIPTION: AC-DC POWER SUPPLY

DISCONTINUED

FEATURES

- up to 70 W continuous power
- compact size
- universal input (90~277 Vac)
- single output from 5~48 Vdc
- user trimmable output voltage option
- no load power consumption <0.24W
- 3000 Vac isolation
- over current, over voltage, and short circuit protections
- certified to 60950: UL/cUL
- efficiency up to 90%

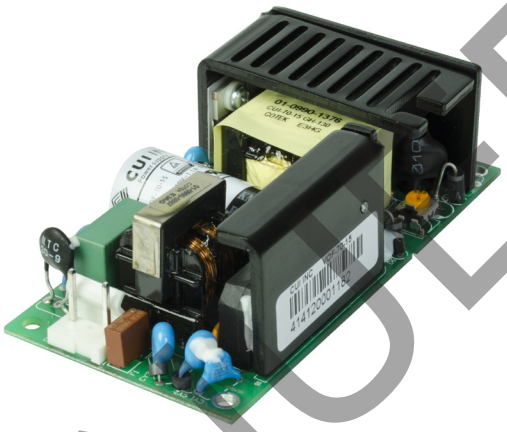

MODEL	output voltage (Vdc)	output current max (A)	output power max (W)	ripple and noise[1] max (mVp-p)	efficiency typ (%)
VOF-70-5	5	8.61	43	120	81
VOF-70-12*	12	5.9	70	120	87
VOF-70-15*	15	4.7	70	150	87
VOF-70-24*	24	3	70	240	88
VOF-70-28	28	2.5	70	280	88
VOF-70-48	48	1.5	70	480	90

Notes:
1. Ripple & noise are measured at 20 MHz BW with 0.1 µF ceramic cap and a 10 µF electrolytic capacitors on the output and the two earth ground pads are connected to input earth ground.
2. * Discontinued model.

PART NUMBER KEY

VOF-70 - XX

Base Number — Output Voltage

DISCONTINUED

INPUT

parameter	conditions/description	min	typ	max	units
voltage		90		277	Vac
frequency		47		63	Hz
input current	at 115 Vac, full load at 230 Vac, full load		1.5 0.7		A A
inrush current	at 230 Vac, cold start		50		A
leakage current	at 277 Vac			3.5	mA
no load power consumption	at 110 Vac at 230 Vac			0.24 0.30	W W
input fuse	2 A/250V time delay fuse (included)				

OUTPUT

parameter	conditions/description	min	typ	max	units
line regulation	low line to high line		±0.5		%
load regulation	full load to 10% load		±1		%
initial set point accuracy			±3		%
transient response	1 kHz, 10~100% load VOF-70-5 VOF-70-12 VOF-70-15 VOF-70-24 VOF-70-28 VOF-70-48		 500 1200 1500 2400 2800 4800		 mVp-p mVp-p mVp-p mVp-p mVp-p mVp-p
hold-up time	at 115 Vac, full load	8			ms
start-up time	at 115 Vac, full load		50		ms
start-up delay	at 115 Vac, full load		1000		ms
adjustability	built in trim pot		±5		%
switching frequency		61	65	69	kHz
temperature coefficient			±0.03		%/°C

PROTECTIONS

parameter	conditions/description	min	typ	max	units
short circuit protection	hiccup, auto recovery	110			%
over current protection	hiccup, auto recovery	110			%
over voltage protection	clamped by TVS				

SAFETY & COMPLIANCE

parameter	conditions/description	min	typ	max	units
isolation voltage	input to output input to ground output to ground	3,000 1,500 1,500			Vac Vac Vac
safety approvals	certified to 60950: UL/cUL				
EMI/EMC[1]	EN 55022: 2010 Class B, EN 61204-3:2000, EN 61000-6-3: 2007 +A1: 2011, EN 61000-3-2: 2006 +A2: 2009, EN 61000-3-3: 2008, EN 55024: 2010, EN 61000-6-1: 2007, ENV 50204: 1995, CE, FCC				
class	class II				
MTBF	as per MIL-HDBK-217F at 25 °C, full load	250,000			hours
RoHS	2011/65/EU				

Notes: 1. The power supply is considered a component which will be installed into final equipment. The final equipment still must be tested to meet the necessary EMC directives.

ENVIRONMENTAL

parameter	conditions/description	min	typ	max	units
operating temperature	see derating curves	-20		60	°C
storage temperature		-40		85	°C
operating humidity	non-condensing	20		90	%
storage humidity	non-condensing	20		90	%
operating altitude			2000		m
vibration & shock	10~3000Hz, 10 minutes per cycle, for 1 hour along each of the X, Y, and Z axes		2		G

DERATING CURVES

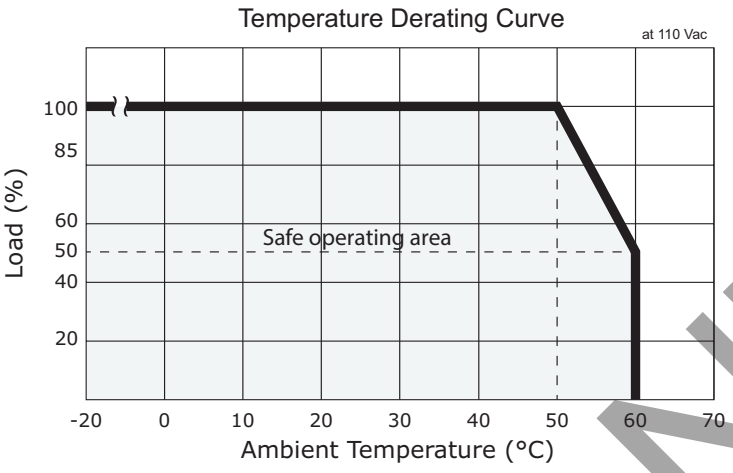

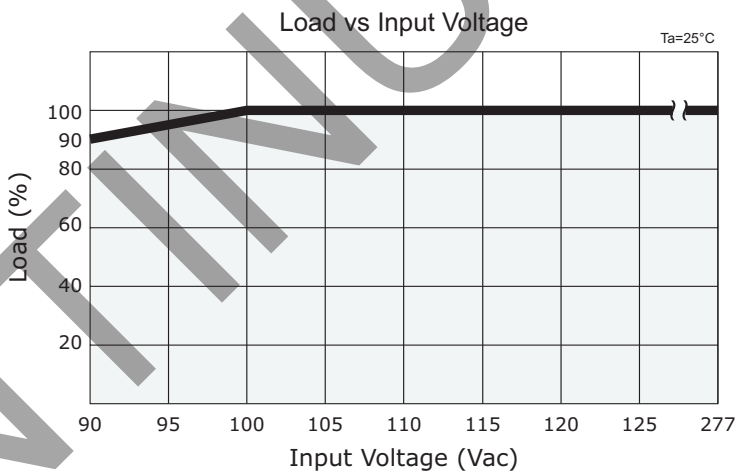

DISCONTINUED

MECHANICAL

parameter	conditions/description	min	typ	max	units
dimensions	101.6 x 50.8 x 33.6 (4.00 x 2.00 x 1.32 inch)				mm
weight			160		g
cooling method	open frame (convection)				

MECHANICAL DRAWING

units: mm[inch]
tolerance: ±0.30

CN1	
PIN	Function
1	L
2	NP
3	N

CN2	
PIN	Function
1	+Vo
2	+Vo
3	-Vo
4	-Vo

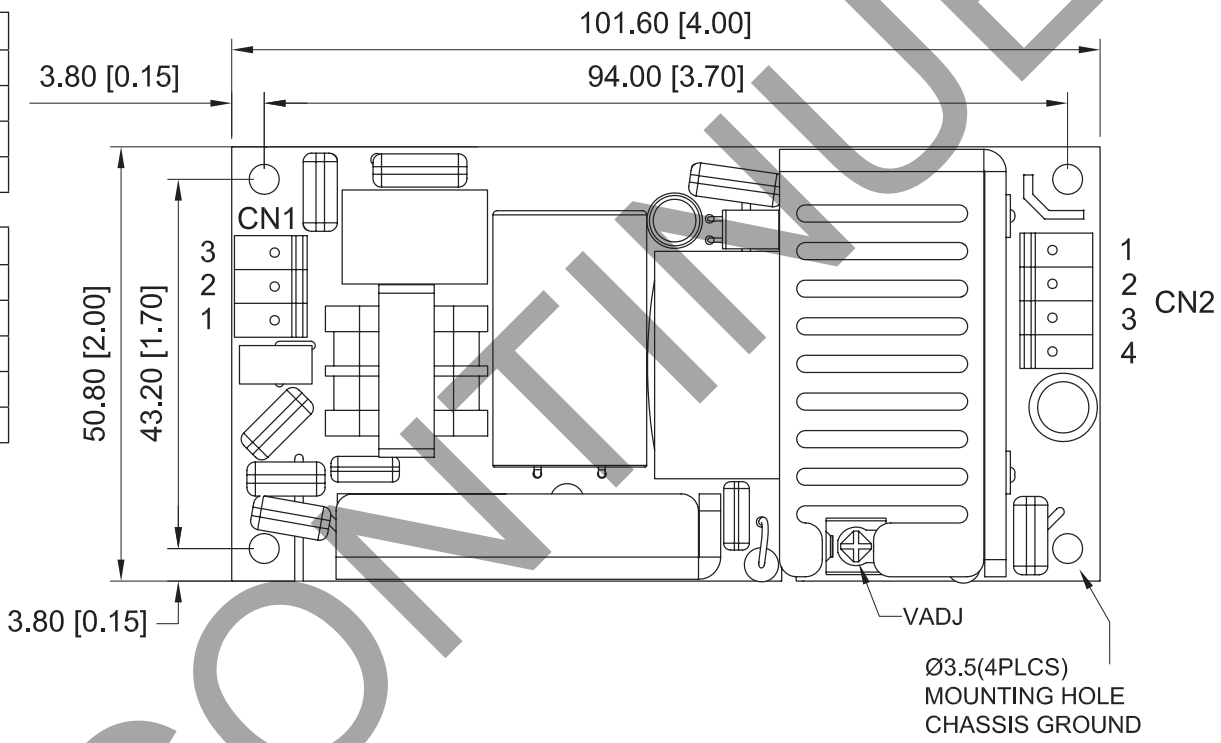

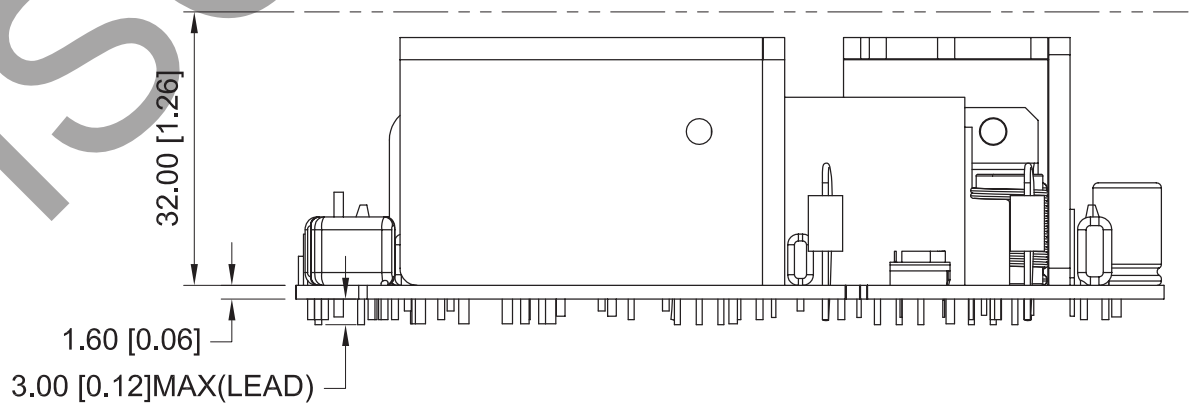

Notes:
1. CN1 mates with Molex housing 09-50-3031 with Molex 2478 series crimp contact or equivalent.
2. CN2 mates with Molex housing 09-50-3041 with Molex 2478 series crimp contact or equivalent.
3. All specifications are measured at Ta=25°C, 230 Vac input voltage, and rated output load unless otherwise specified.

DISCONTINUED

REVISION HISTORY

rev.	description	date
1.0	initial release	04/08/2014
1.01	updated datasheet	05/09/2014
1.02	updated datasheet	07/22/2014
1.03	safety information updated	11/19/2020
1.04	discontinued model VOF-70-12, VOF-70-15 & VOF-70-24	02/06/2023

The revision history provided is for informational purposes only and is believed to be accurate.

DISCONTINUED

CUI INC
a bel group

Headquarters
20050 SW 112th Ave.
Tualatin, OR 97062
800.275.4899

Fax 503.612.2383
cui.com
techsupport@cui.com

CUI offers a two (2) year limited warranty. Complete warranty information is listed on our website.

CUI reserves the right to make changes to the product at any time without notice. Information provided by CUI is believed to be accurate and reliable. However, no responsibility is assumed by CUI for its use, nor for any infringements of patents or other rights of third parties which may result from its use.

CUI products are not authorized or warranted for use as critical components in equipment that requires an extremely high level of reliability. A critical component is any component of a life support device or system whose failure to perform can be reasonably expected to cause the failure of the life support device or system, or to affect its safety or effectiveness.