CUDEVICES

MODEL: PJ-059AH | **DESCRIPTION:** DC POWER JACK

FEATURES

- 2.0 mm center pin
- 5.0 A rating
- right-angle orientation
- through hole
- locking type
- tapered pins

RoHS

SPECIFICATIONS

parameter	conditions/description	min	typ	max	units
rated input voltage			24		Vdc
rated input current				5.0	A
contact resistance				30	mΩ
insulation resistance	at 500 Vdc	100			MΩ
voltage withstand	for 1 minute			500	Vac
insertion/withdrawal force		0.3		3	kg
operating temperature		-25		85	°C
life			5,000		cycles
flammability rating	UL94V-0				
RoHS	yes				

SOLDERABILITY

parameter	conditions/description	min	typ	max	units
wave soldering	dipped in solder pot for 5 ±0.5 seconds	255	260	265	°C

MECHANICAL DRAWING

units: mm
tolerance:
X. ±0.50 mm
X.X ±0.30 mm
X.XX ±0.20 mm
X.XXX ±0.10 mm
PCB: ±0.05 mm

DESCRIPTION	MATERIAL	PLATING/COLOR
center pin	brass	nickel
terminal 1	brass t=0.30	silver
terminal 2	bronze t=0.25	silver
terminal 3	brass t=0.30	silver
cover	PBT (UL94V-0)	black
housing	PBT (UL94V-0)	black

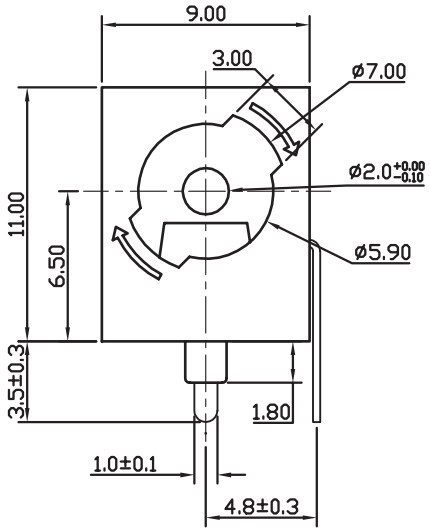

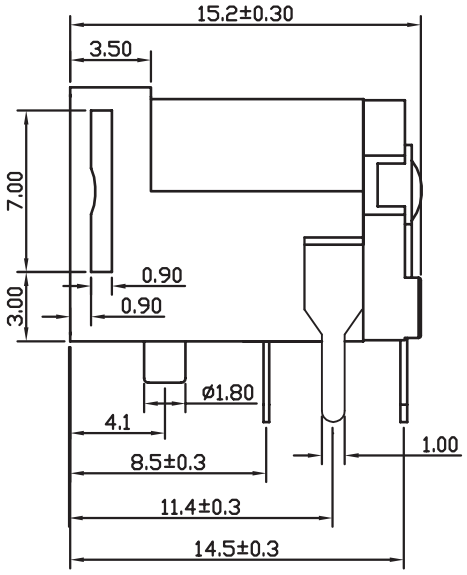

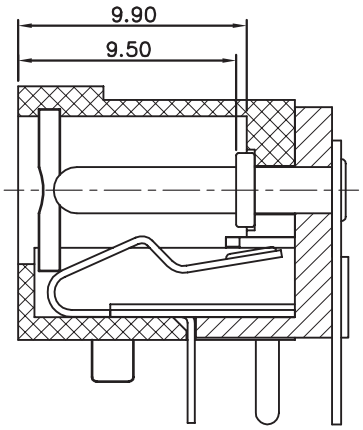

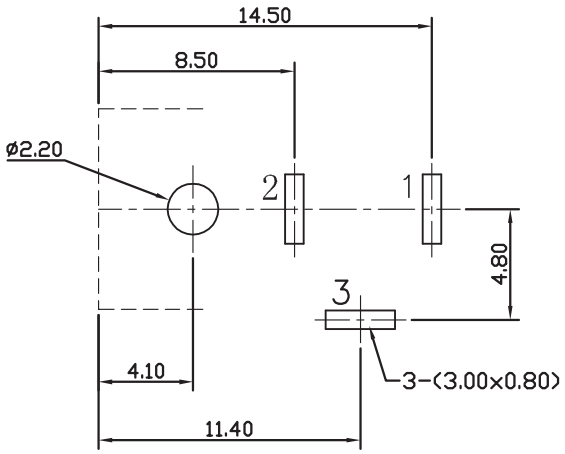

Recommended PCB Layout
Top View

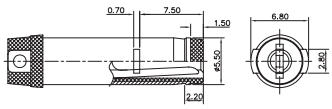

MATING PLUG
Jack Insertion Depth: 9.5 mm

SCHEMATIC	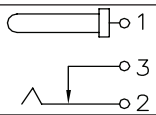
Model	PJ-059AH
Center Pin	Ø2.0 mm

REVISION HISTORY

rev.	description	date
1.0	initial release	07/30/2007
1.01	applied new spec template	01/06/2014
1.02	increased voltage rating	04/22/2016
1.03	brand update	10/30/2019
1.04	product reengineered for improved manufacturability and production yield, see PCN for details	02/27/2023

The revision history provided is for informational purposes only and is believed to be accurate.

CUI Devices offers a one (1) year limited warranty. Complete warranty information is listed on our website.

CUI Devices reserves the right to make changes to the product at any time without notice. Information provided by CUI Devices is believed to be accurate and reliable. However, no responsibility is assumed by CUI Devices for its use, nor for any infringements of patents or other rights of third parties which may result from its use.

CUI Devices products are not authorized or warranted for use as critical components in equipment that requires an extremely high level of reliability. A critical component is any component of a life support device or system whose failure to perform can be reasonably expected to cause the failure of the life support device or system, or to affect its safety or effectiveness.

cuidevices.com