CUI INC
a bel group

SERIES: PBO-5 | DESCRIPTION: AC-DC POWER SUPPLY

DISCONTINUED

FEATURES

- up to 5 W continuous power
- ultra-compact SIP package
- wide input voltage range
- over current and short circuit protections
- 4,000 Vac isolation
- IEC, EN, UL62368 safety approvals
- efficiency up to 79%

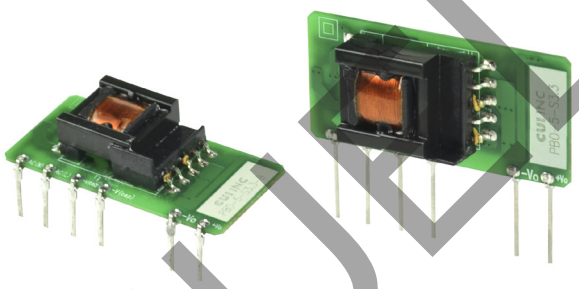

MODEL	output voltage (Vdc)	output current min (mA)	output current max (mA)	output power max (W)	ripple and noise[1] max (mVp-p)	efficiency[2] typ (%)
PBO-5-S3.3*	3.3	0	1000	3.3	150	67
PBO-5-S5*	5	0	1000	5	150	74
PBO-5-S9*	9	0	560	5	150	75
PBO-5-S12[5]	12	0	420	5	150	76
PBO-5-S15*	15	0	340	5	150	77
PBO-5-S24*	24	0	210	5	150	79

Notes:
1. At full load, nominal input, 20 MHz bandwidth oscilloscope, with a 1 µF ceramic and 10 µF electrolytyic capacitor on the output.
2. At 230 Vac input.
3. All specifications are measured at Ta=25°C, humidity <75%, 115 or 230 Vac input voltage, and rated output load unless otherwise specified.
4. * Discontinued model.
5. Discontinued model - right-angle version

PART NUMBER KEY

PBO-5 - S XX - X

- PBO-5: Base Number
- XX: Output Voltage
- X: Orientation: "blank" = vertical, B = right-angle

DISCONTINUED

INPUT

parameter	conditions/description	min	typ	max	units
voltage		85 100		305 430	Vac Vdc
frequency		47		63	Hz
current	at 115 Vac at 230 Vac			0.2 0.1	A A
inrush current	at 115 Vac at 230 Vac		5 10		A A
leakage current	CY0 is 1 nF/400 Vac			0.25	mA
no load power consumption				0.5	W

OUTPUT

parameter	conditions/description	min	typ	max	units
capacitive load	3.3 Vdc output models 5 Vdc output models 9 Vdc output models 12 Vdc output models 15 Vdc output models 24 Vdc output models			2,200 1,500 680 470 330 100	µF µF µF µF µF µF
initial set point accuracy	3.3 Vdc output models all other models			±3 ±2	% %
line regulation	at full load		±0.5		%
load regulation	from 10~100% load			±1.5	%
hold-up time	at 115 Vac at 230 Vac		15 75		ms ms
switching frequency			100		kHz
temperature coefficient			±0.02		%/°C

PROTECTIONS

parameter	conditions/description	min	typ	max	units
over voltage protection	output voltage clamp 3.3 & 5 Vdc output models 9 Vdc output models 12 & 15 Vdc output models 24 Vdc output models			 7.5 15 20 30	 Vdc Vdc Vdc Vdc
over current protection	auto recovery	150			%
short circuit protection	continuous, auto recovery				

SAFETY & COMPLIANCE

parameter	conditions/description	min	typ	max	units
isolation voltage	input to output at 5 mA for 1 minute	4,000			Vac
safety approvals	certified to 62368: IEC, EN, UL				
safety class	class II				
conducted emissions	CISPR32/EN55032 Class A, (recommended circuit 1,4)				
	CISPR32/EN55032 Class B, (recommended circuit 2,3)				
radiated emissions	CISPR32/EN55032 Class B, (recommended circuit 1,2,3,4)				
ESD	IEC/EN61000-4-2, ±6 kV, perf. Criteria B				
radiated immunity	IEC/EN61000-4-3, 10V/m, perf. Criteria A				
EFT/burst	IEC/EN61000-4-4, ±2 kV (recommended circuit 1,2), perf. Criteria B				
	IEC/EN61000-4-4, ±4 kV (recommended circuit 3,4), perf. Criteria B				

SAFETY & COMPLIANCE (CONTINUED)

parameter	conditions/description	min	typ	max	units
surge	IEC/EN61000-4-5, line to line ±1kV (recommended circuit 1), perf. Criteria B				
	IEC/EN61000-4-5, line to line ±2kV (recommended circuit 4), perf. Criteria B				
	IEC/EN61000-4-5, line to line ±1 kV/ line to ground ±2 kV (recommended circuit 2), perf. Criteria B				
	IEC/EN61000-4-5, line to line ±2 kV/ line to ground ±4 kV (recommended circuit 3), perf. Criteria B				
conducted immunity	IEC/EN61000-4-6, 10 Vr.m.s, perf. Criteria A				
voltage dips & interruptions	IEC/EN61000-4-11 Class B, 0%-70%, perf. Criteria B				
MTBF	as per MIL-HDBK-217F at 25 °C	300,000			hours
RoHS	2011/65/EU				

Notes: 1. The power supply is considered a component which will be installed into final equipment. The final equipment still must be tested to meet the necessary EMC directives.

ENVIRONMENTAL

parameter	conditions/description	min	typ	max	units
operating temperature	see derating curves	-40		85	°C
storage temperature		-40		105	°C
storage humidity	non-condensing			85	%

SOLDERABILITY

parameter	conditions/description	min	typ	max	units
hand soldering	for 3~5 seconds	350	360	370	°C
wave soldering	for 5~10 seconds	255	260	265	°C

WAVE SOLDERING PROFILE

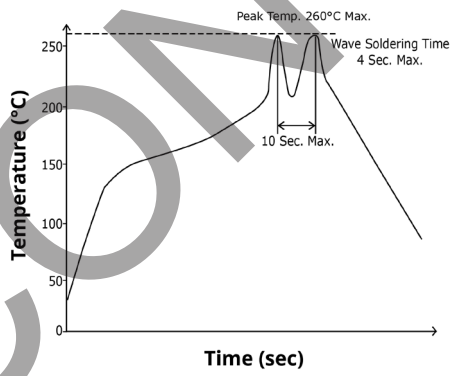

DERATING CURVES

TEMPERATURE DERATING CURVE

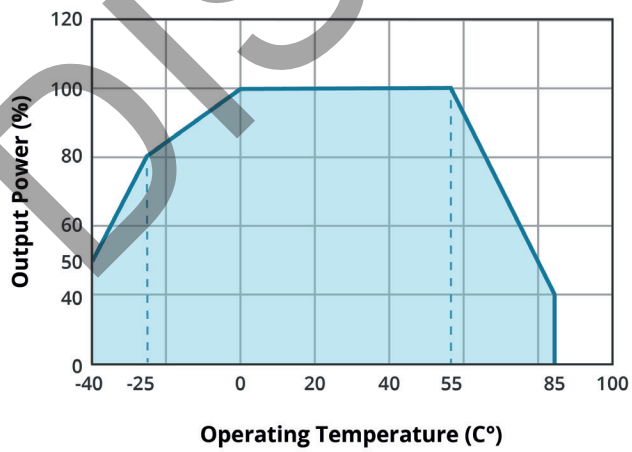

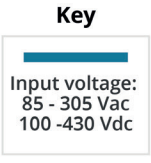

INPUT VOLTAGE DERATING CURVE (25°C)

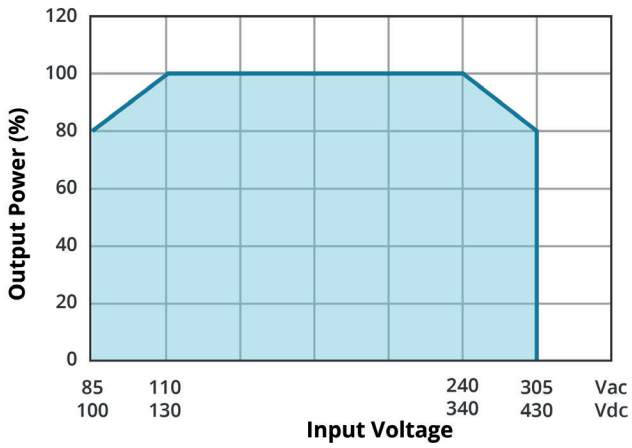

DISCONTINUED

MECHANICAL

parameter	conditions/description	min	typ	max	units
dimensions	vertical models: 40.00 x 12.80 x 18.50 (1.575 x 0.504 x 0.729 inches) right-angle models: 40.00 x 20.00 x 12.80 (1.575 x 0.787 x 0.504 inches)				mm mm
weight			7		g

MECHANICAL DRAWING

Vertical Orientation
units: mm[inch]
tolerance: ±0.50[±0.020]
pin section tolerance: ±0.10[±0.004]

PIN CONNECTIONS	
PIN	Function
1	AC (N)
3	AC (L)
5	+V(CAP)
7	-V(CAP)
12	-Vo
14	+Vo

Note: 1. It is required to add C1 between pins 5 & 7 (see application circuits).

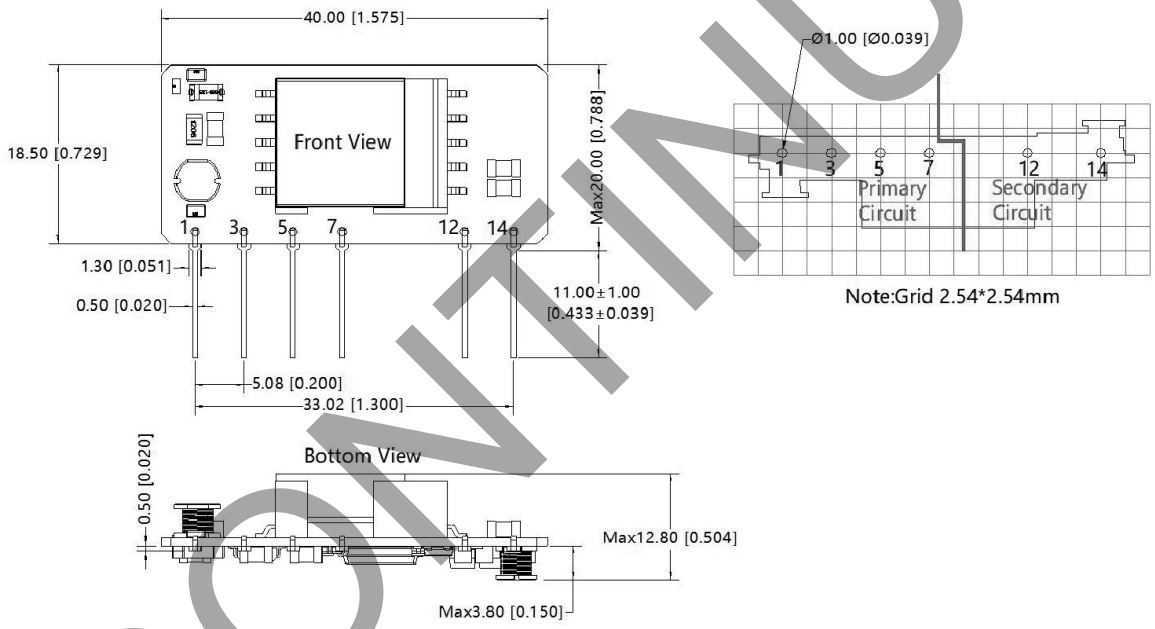

DISCONTINUED

MECHANICAL DRAWING (CONTINUED)

Right-angle Orientation
units: mm[inch]
tolerance: ±0.50[±0.020]
pin section tolerance: ±0.10[±0.004]

PIN CONNECTIONS	
PIN	Function
1	AC (N)
3	AC (L)
5	+V(CAP)
7	-V(CAP)
12	-Vo
14	+Vo

Note: 1. It is required to add C1 between pins 5 & 7 (see application circuits).

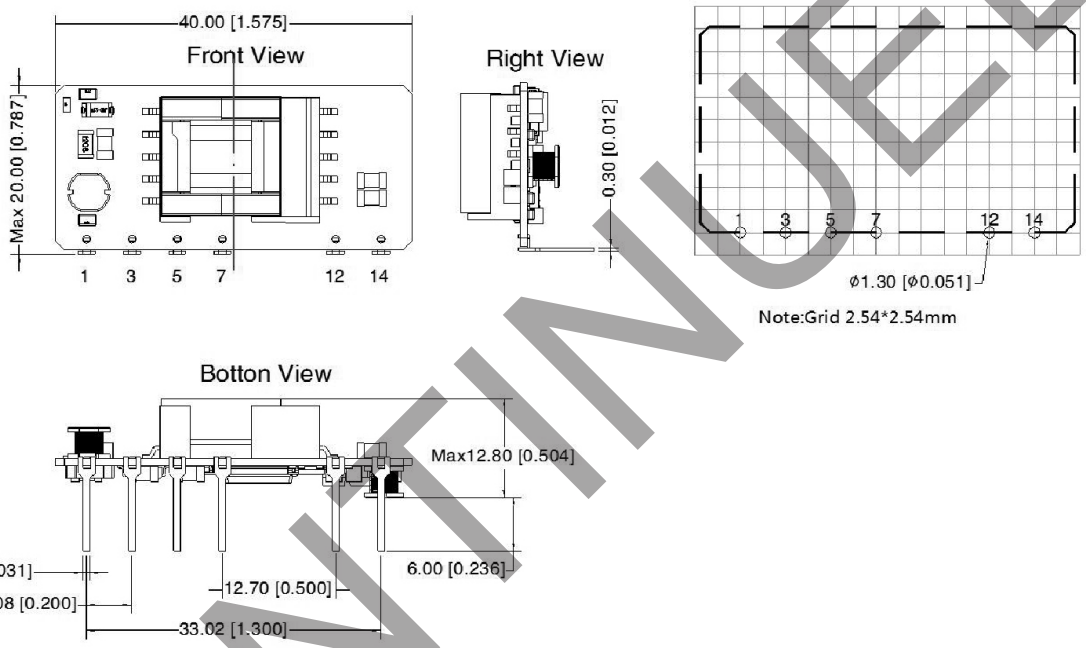

DISCONTINUED

APPLICATION DESIGN REFERENCE

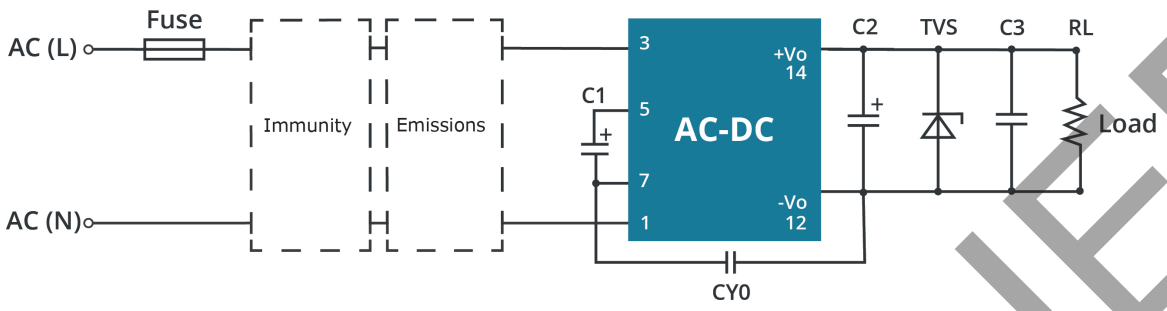

PBO-5 series additional circuits design reference			
Immunity design circuits for reference		Emissions design circuits for reference	
Class III	Class IV	Class A	Class B
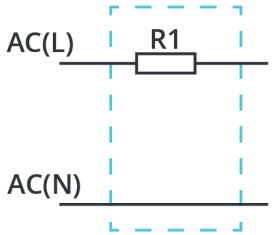	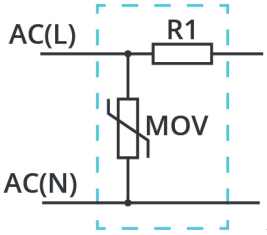	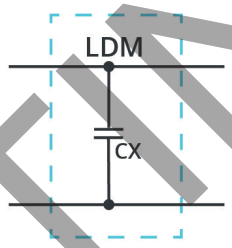	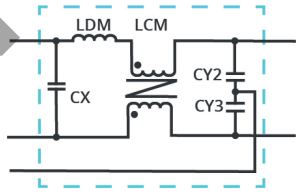

PBO-5 Series additional component selection guide (no EMC devices)						
Part no.	C1 (required)	C2 (required)	C3 (required)	C4	CY1 (required)	TVS
PBO-5-S3.3	10μF/450V (-25°C~85°C) 22μF/450V (-40°C~85°C)	220μF/16V (-25°C~85°C) 470μF/16V (-40°C~85°C)	0.1μF/50V	0.1μF/50V	1nF/400 Vac	SMBJ7.0A
PBO-5-S5						SMBJ7.0A
PBO-5-S9		220μF/25V (-25°C~85°C) 470μF/25V (-40°C~85°C)				SMBJ12A
PBO-5-S12						SMBJ20A
PBO-5-S15						SMBJ20A
PBO-5-S24		150μF/35V (-25°C~85°C) 470μF/35V (-40°C~85°C)				SMBJ30A

Note: 1. C1 is used as filter capacitor with AC input (must be connected externally) and as EMC filter capacitor with DC input (must be connected). The recommended value of C1 is 10 μF/400V (85 Vac-264Vac); 10μF/450 V (100Vdc-370Vdc), 10μF/450V (100Vdc-430Vdc).
2. It is recommended using an electrolytic capacitor with high frequency and low ESR rating for C2. Choose a capacitor voltage rating with at least 20% margin, in other words not exceeding 80%. C3 is a ceramic capacitor, used for filtering high frequency noise. A suppressor diode (TVS) is a recomended to protect the application in case of a converter failure and specification should be 1.2 times of the output voltage.

PBO-5 Series Enviromental and EMC selection guide						
Recommended circuit	Application enviromental	Typical industry	Input voltage range	Enviroment temperature	Emissions	Immunity
1	Basic application	None	85 ~ 305 Vac	-40° ~ 85°C	Class A	Class III
2	Indoor civil enviroment	Smart home / Home appliances (2Y)		-25° ~ 55°C	Class B	Class III
	Indoor general enviroment	Intelligent building / Intelligent agriculture				
3	Indoor industrial enviroment	Manufacturing workshop		-25° ~ 55°C	Class B	Class IV
4	Oudoor general enviroment	ITS / Video monitoring / Charging point / Communication / Securitiy and protection		-40° ~ 85°C	Class A	Class IV

DISCONTINUED

EMC RECOMMENDED CIRCUIT

Circuit 1

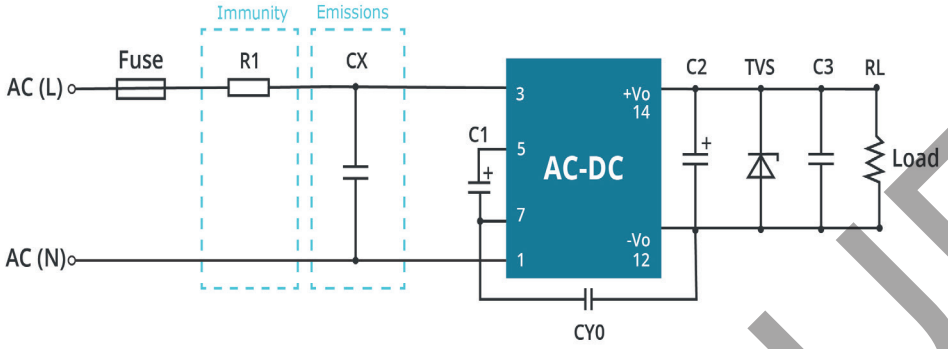

Table 1

Application enviromental	Ambient temperature range	Immunity Class	Emissions Class
Basic application	-40°C ~ 85°C	Class III	Class A

Component	Recommended value
R1	12Ω/3W
CX	0.1uF/310Vac
FUSE	1A/300V, slow-blow

Note: Acording to the certification requirements, the X capacitor needs to be connected in parallel with the bleeder resistance, the recommended resistance value is less than 3.8MΩ, and the actual need to be selected according to the certification standard.

Circuit 2

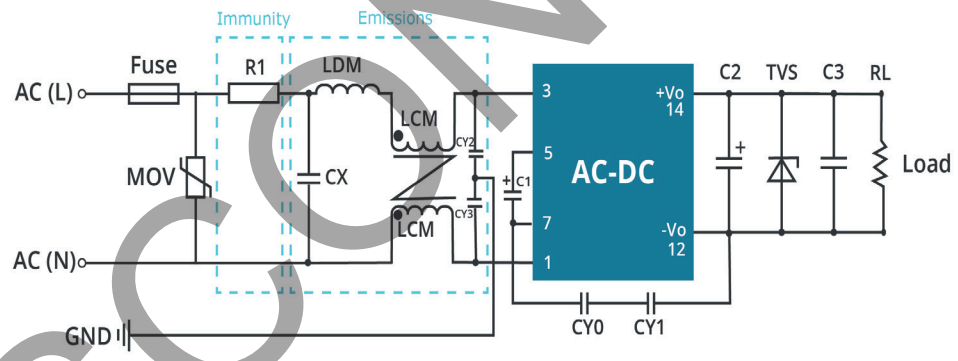

Table 2

Application enviromental	Ambient temperature range	Immunity Class	Emissions Class
Indoor civil / general	-25°C ~ 55°C	Class III	Class A

Component	Recommended value
R1	12Ω/2W
CY0 (CY1)	1NF/400Vac
LCM	3.5 mH (min: 0.2A, max: 200mΩ)
LDM	0.33 mH (min: 0.4A, Max: 1Ω)
CX	0.1μF/310Vac
CY2/CY3	1nF/400Vac
FUSE (required)	1A/300V, slow-blow

Note:
1. In the home appliance appliation enviroment, the two & capacitors of the primary and secondary need to be externally connected (CY0/CY1, value at 2.2nF/250Vac), which can meet the EN60335 certification.
2. According to the certification requirements, the X capacitor needs to be connected in the parallel with the bleeder resistance, the recommended resistance value is less than 3.8 MΩ, and the actual need to be selected according to the certification standard.

DISCONTINUED

EMC RECOMMENDED CIRCUIT (CONTINUED)

Circuit 3

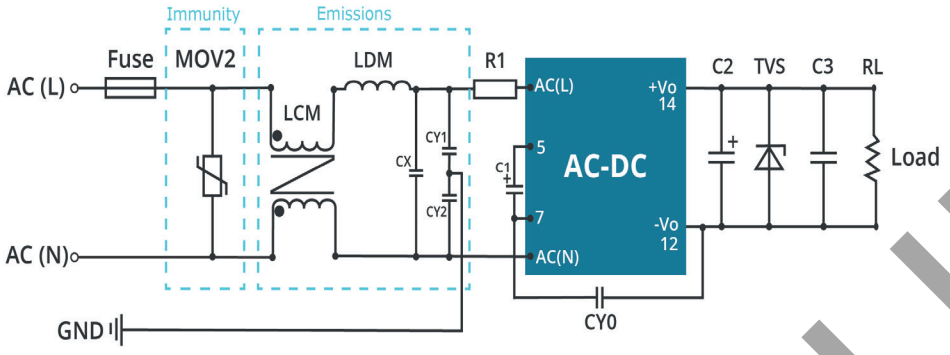

Table 3

Application enviromental	Ambient temperature range	Immunity Class	Emissions Class
Indoor industrial enviroment	-25°C ~ 55°C	Class IV	Class B

Component	Recommended value
R1	12Ω/3W
LCM	3.5 mH (min: 0.2A, max: 200mΩ)
LDM	0.33 mH (min: 0.4A, Max: 1Ω)
CX	0.1μF/310Vac
CY1, CY2	1nF/400Vac
FUSE (required)	2A/300V, slow-blow
MOV2	S14K350

Note: According to the certification requirements, the X capacitor needs to be connected in parallel with the bleeder resistance, the recommended resistance value is less than 3.8MΩ, and actual need to be selected according to the certification standard.

DISCONTINUED

EMC RECOMMENDED CIRCUIT (CONTINUED)

Circuit 4

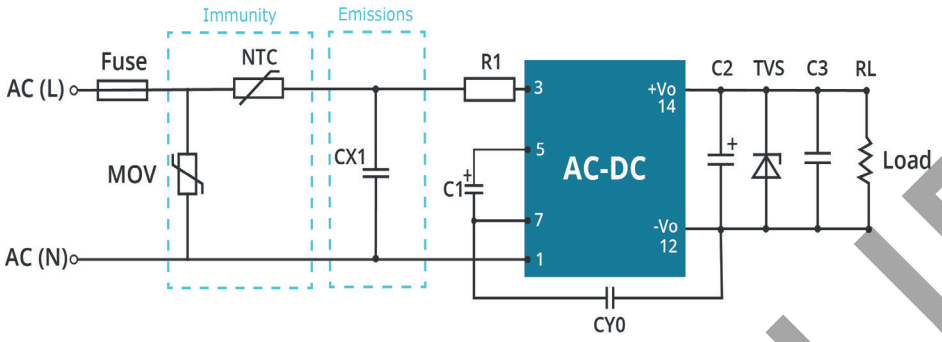

Table 4

Application enviromental	Ambient temperature range	Immunity Class	Emissions Class
Outdoor general enviroment	-40°C ~ 85°C	Class IV	Class A

Component	Recommended value
R1	12Ω/3W
CX1	0.1uF/310Vac
NTC	13D-5
MOV	S14K350
FUSE	1A/300V, slow-blow

Note: According to the certification requirements, the X capacitor needs to be connected in parallel with the bleeder resistance, the recommended resistance value is less than 3.8MΩ, and the actual need to be selected according to the certification standard.

DISCONTINUED

REVISION HISTORY

rev.	description	date
1.0	initial release	10/18/2016
1.01	added right-angle pin versions, updated to 62368 safety approvals, reduced component height to 12.80 mm max	04/19/2018
1.02	datasheet update, safety approvals updated to match 62368 certification, PCN-656-95022R-01	10/14/2020
1.03	derating curves updated	01/20/2022
1.04	UKCA mark added	05/25/2022
1.05	discontinued model PBO-5-S9	06/29/2022
1.06	discontinued models PBO-5-S3.3, PBO-5-S3.3-B, PBO-5-S5, PBO-5-S12-B, PBO-5-S15, PBO-5-S15-B, PBO-5-S24, PBO-5-S24-B	09/13/2022
1.07	discontinued model PBO-5-S5-B	12/14/2022

The revision history provided is for informational purposes only and is believed to be accurate.

DISCONTINUED

CUI INC
a bel group

Headquarters
20050 SW 112th Ave.
Tualatin, OR 97062
800.275.4899

Fax 503.612.2383
cui.com
techsupport@cui.com

CUI offers a two (2) year limited warranty. Complete warranty information is listed on our website.

CUI reserves the right to make changes to the product at any time without notice. Information provided by CUI is believed to be accurate and reliable. However, no responsibility is assumed by CUI for its use, nor for any infringements of patents or other rights of third parties which may result from its use.

CUI products are not authorized or warranted for use as critical components in equipment that requires an extremely high level of reliability. A critical component is any component of a life support device or system whose failure to perform can be reasonably expected to cause the failure of the life support device or system, or to affect its safety or effectiveness.