CUDEVICES

SERIES: CMS-28588N-L152 | **DESCRIPTION:** SPEAKER

FEATURES

- miniature speaker
- 550 Hz resonant frequency
- wire leads with connector options

RoHS

SPECIFICATIONS

parameter	conditions/description	min	typ	max	units
input power	maximum power: IEC-60268-5, filter 60s on/120s off, 10 cycles at room temp		2.0	2.5	W
impedance	at 2.0 kHz, 1.0 V	6.8	8	9.2	Ω
resonant frequency (Fo)	at 1.0 V	440	550	660	Hz
frequency response	output SPL -10 dB	Fo		20,000	Hz
sound pressure level	at 1.0 W, 0.1 m ave, at 0.8, 1.0, 1.2, 1.5 kHz at 2.0 W, 0.5 m ave, at 0.8, 1.0, 1.2, 1.5 kHz	96 85	99 88	102 91	dB dB
distortion	at 1.0 kHz, 1.0 W			10	%
buzz, rattle, etc.	must be normal at sine wave between Fo ~ 20,000 Hz		4.0		V
dimensions	Ø28 x 5.5				mm
magnet	Nd-Fe-B				
material	SPCC				
cone material	PET				
terminal	wire leads				
weight			7.6		g
operating temperature		-20		55	°C
storage temperature		-30		70	°C
hand soldering	for maximum 3 seconds	370	380	390	°C
RoHS	yes				

Notes: 1. All specifications measured at 5~35°C, humidity at 45~85%, under 86~106 kPa pressure, unless otherwise noted.

PART NUMBER KEY

CMS-28588N-L152 X

Base Number

Termination Options:
"blank" = wire leads, no connector
A = wire leads with Molex housing 51021-0200
B = wire leads with JST housing SHR-02V-S-B

MECHANICAL DRAWINGS

units: mm
tolerance: ±0.2 mm

WIRE LEADS, NO CONNECTOR

wire: UL 1007 28 AWG

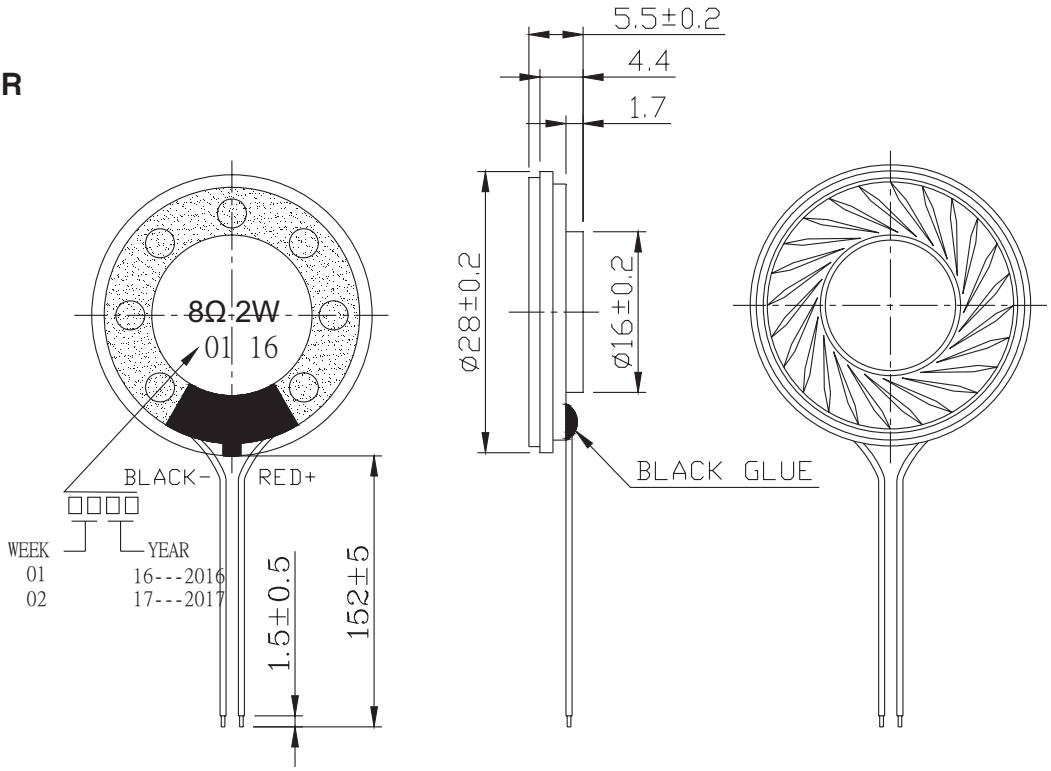

WIRE LEADS WITH MOLEX CONNECTOR

wire: UL 1571 28 AWG
connector: Molex 51021-0200
mating connector: Molex 53261-0271

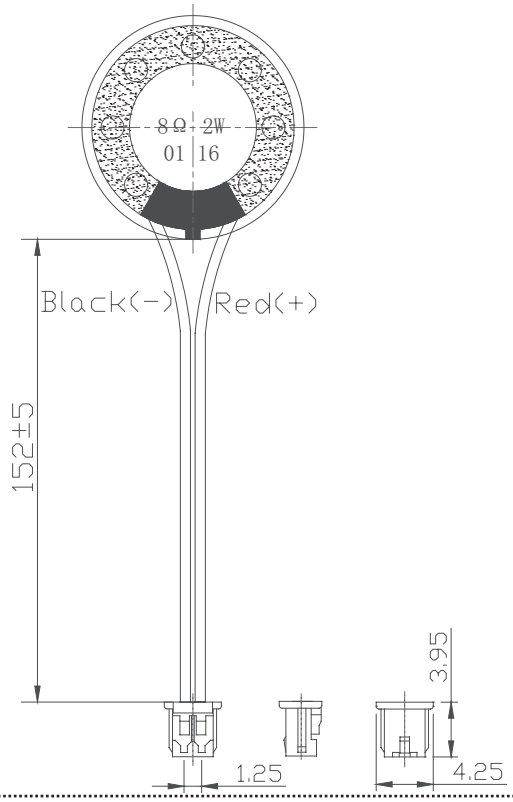

WIRE LEADS WITH JST CONNECTOR

wire: UL 1571 28 AWG
connector: JST SHR-02V-S-B
mating connector: JST BM02B-SRSS-TB

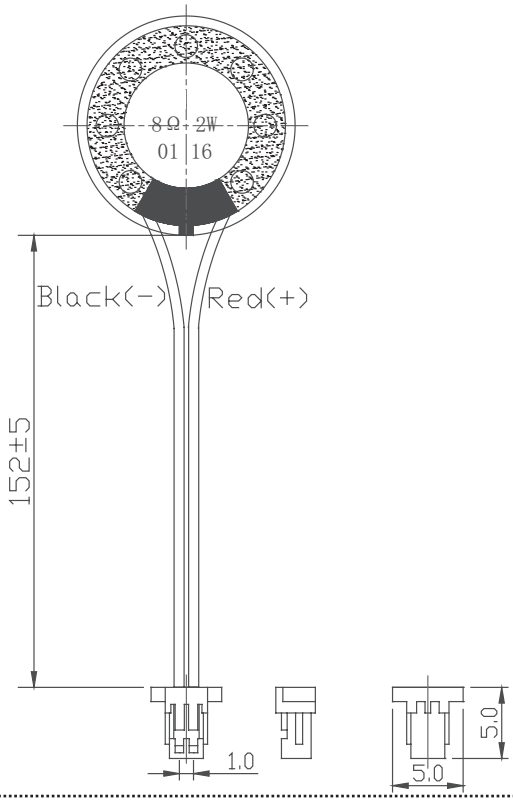

FREQUENCY RESPONSE CURVE

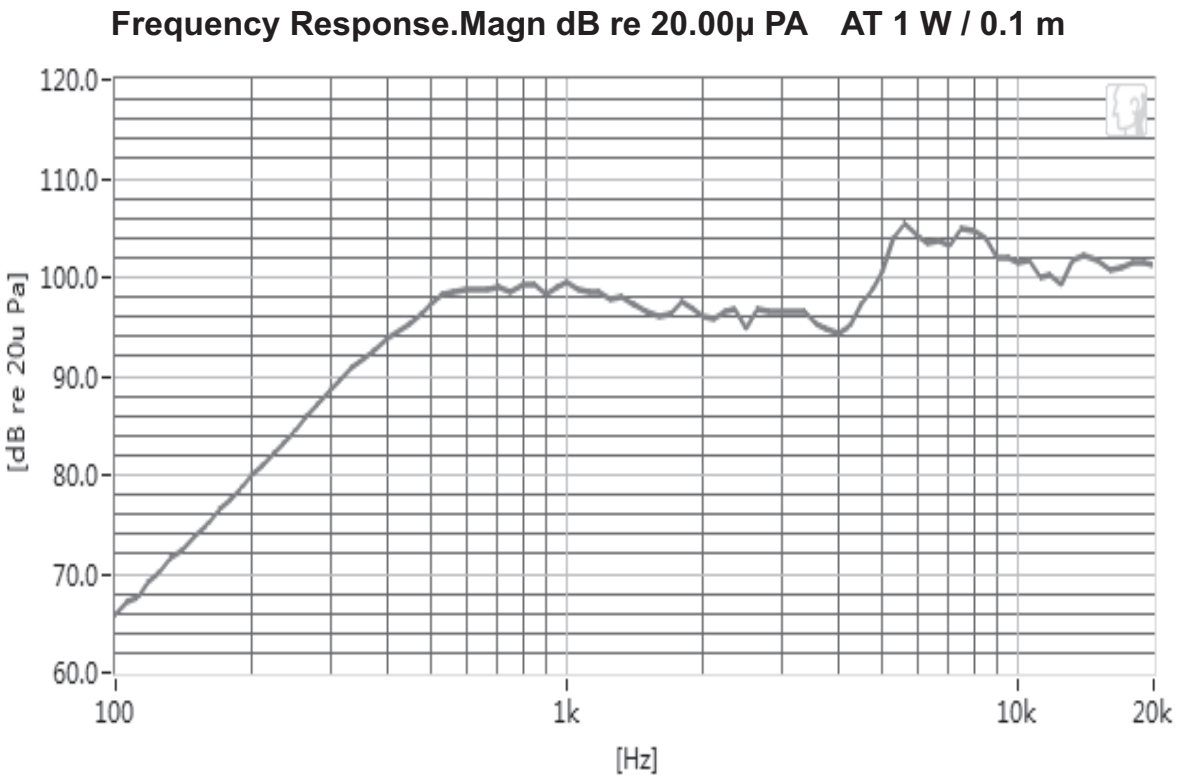

PACKAGING

units: mm

Tray Size: 330 x 250 x 13 mm
Carton Size: 345 x 265 x 305 mm
Tray QTY: 50 pcs per tray
Carton QTY: 1,000 pcs per carton

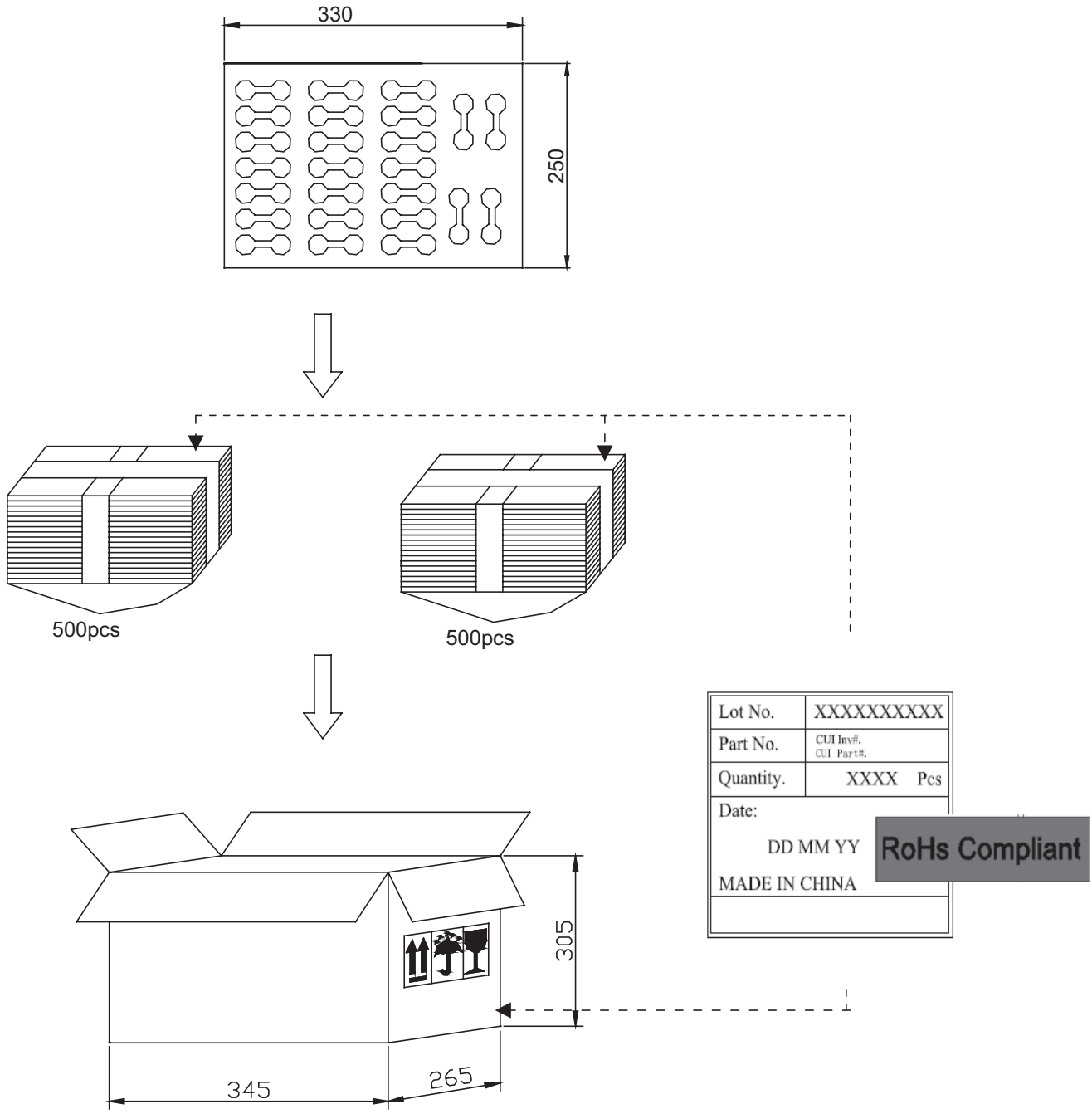

REVISION HISTORY

rev.	description	date
1.0	initial release	06/28/2016
1.01	brand update	01/22/2020
1.02	added Molex and JST connector options	10/23/2020
1.03	logo, datasheet style update	08/05/2022

The revision history provided is for informational purposes only and is believed to be accurate.

CUI Devices offers a one (1) year limited warranty. Complete warranty information is listed on our website.

CUI Devices reserves the right to make changes to the product at any time without notice. Information provided by CUI Devices is believed to be accurate and reliable. However, no responsibility is assumed by CUI Devices for its use, nor for any infringements of patents or other rights of third parties which may result from its use.

CUI Devices products are not authorized or warranted for use as critical components in equipment that requires an extremely high level of reliability. A critical component is any component of a life support device or system whose failure to perform can be reasonably expected to cause the failure of the life support device or system, or to affect its safety or effectiveness.